MILL STATION PARK

59-67 MILL STREET · BROOKFIELD · MASSACHUSETTS

CONSTRUCTION PLANS

JANUARY 31, 2012

PREPARED FOR

TOWN OF BROOKFIELD
6 CENTRAL STREET
BROOKFIELD, MA 01506

PREPARED BY

FUSS & O'NEILL
317 IRON HORSE WAY, SUITE 204
PROVIDENCE, RI 02908
401.861.3070
www.fando.com

SHEET INDEX

SHEET No.	SHEET TITLE
GI-001	COVER SHEET
CS-101	SITE PLAN
CG-101	GRADING PLAN
CD-501 - CD-502	DETAILS
1 of 1	EXISTING CONDITIONS PLAN PREPARED BY B&R SURVEY, INC AND PROVIDE BY GRAVES ENGINEERING, INC.

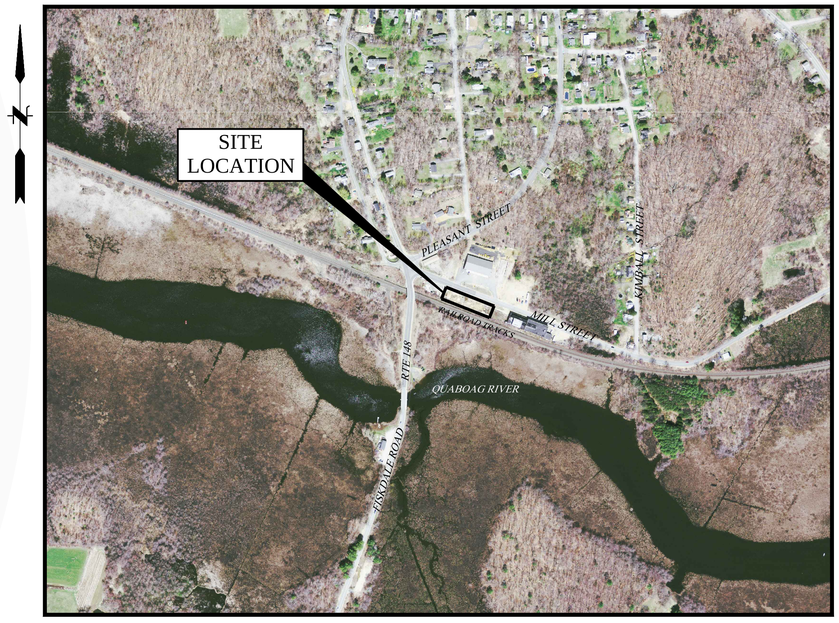

LOCATION MAP
SCALE: 1" = 400'

PROJ. No.: 20110847.A10
DATE: JANUARY 31, 2012

GI-001

File Path: J:\DWG\P\20110847\A10\Civil\Plan\20110847A10_COV01.dwg, Layout: GI-001, Plotted: Tuesday, January 31, 2012, User: lburton Plotter: DWG TO PDF.PC3 CTB File: FO 2008 MONO COVER.CTB

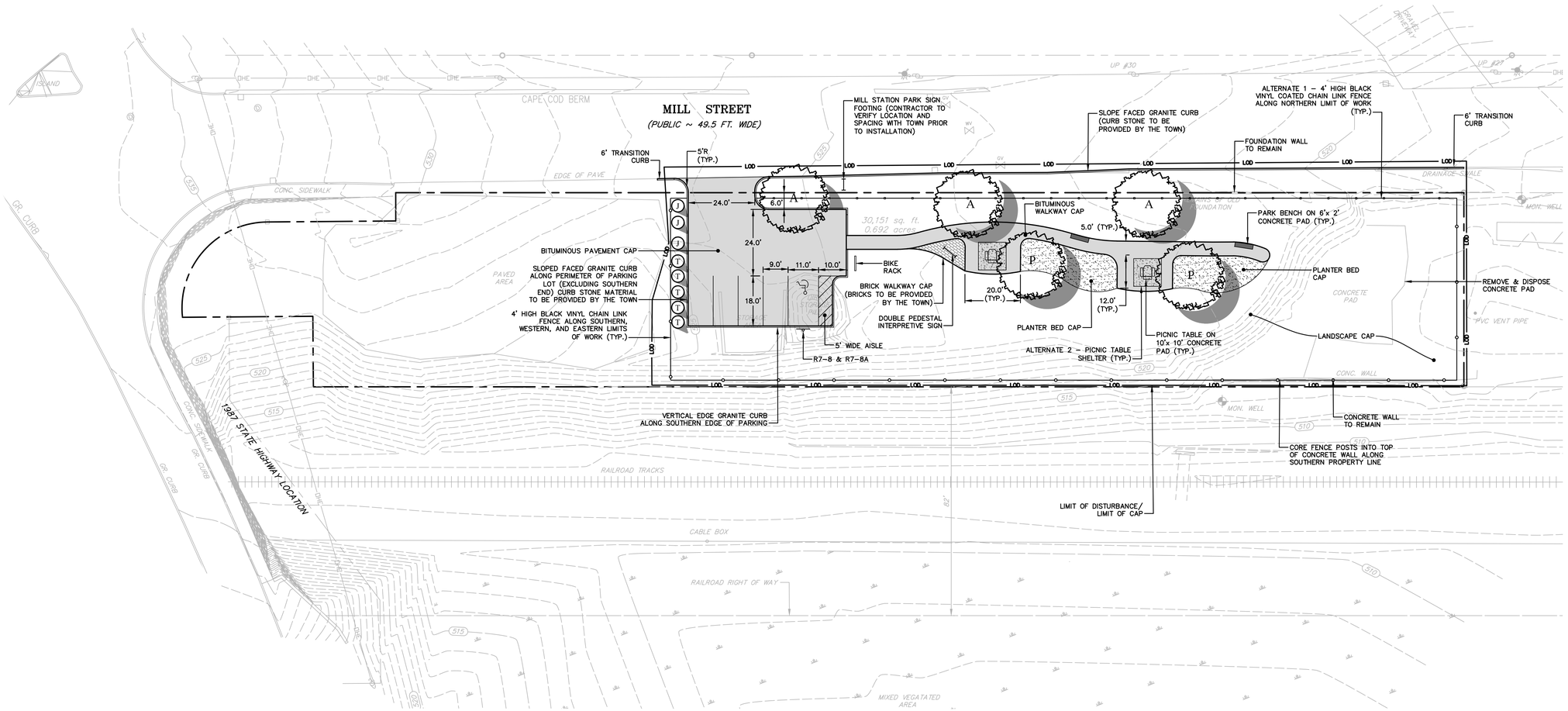

PLANT LIST

CD. #	BOTANICAL NAME	COMMON NAME	SIZE
STREET TREES			
A 3	ACER X FREEMANII AUTUMN BLAZE	AUTUMN BLAZE MAPLE	2–2 1/2" CAL.
ORNAMENTAL TREES			
P 2	PRUNUS SERRULATA	KWANZAN CHERRY	1 1/2–2" CAL.
EVERGREEN TREES			
J 3	JUNIPERUS VIRGINIANA	EASTERN RED CEDAR	4–5' HT.
T 5	THUJA OCCIDENTALIS SMARAGD	EMERALD GREEN ARBORVITAE	4–5' HT.

GENERAL NOTES:

1. BOUNDARY, TOPOGRAPHICAL, AND EXISTING CONDITIONS INFORMATION IS BASED ON A PLAN PREPARED BY B&R SURVEY, INC. AND PROVIDED GRAVES ENGINEERING, INC.
2. THE LOCATIONS OF EXISTING UNDERGROUND UTILITIES SHOWN ARE APPROXIMATE ONLY AND HAVE NOT YET BEEN INDEPENDENTLY VERIFIED BY THE OWNER OR ITS REPRESENTATIVE. THE CONTRACTOR SHALL DETERMINE THE EXACT LOCATION AND ELEVATION OF ALL EXISTING UTILITIES PRIOR TO COMMENCING WORK AND AGREES TO BE FULLY RESPONSIBLE FOR ANY AND ALL DAMAGES WHICH MAY BE OCCASIONED BY THE CONTRACTOR'S FAILURE TO EXACTLY LOCATE AND PRESERVE ANY AND ALL UNDERGROUND UTILITIES. THE CONTRACTOR SHALL CONTACT "DIG SAFE" AT 811, 72–HOURS, EXCLUDING WEEKENDS AND HOLIDAYS, PRIOR TO ANY EXCAVATION PERFORMED ON SITE.
3. CONTRACTOR SHALL OBTAIN ALL NECESSARY PERMITS PRIOR TO CONSTRUCTION.
4. ALL AREAS WITHIN LIMIT OF DISTURBANCE NOT SPECIFIED AS BITUMINOUS OR GRAVEL SHALL BE STABILIZED IN ACCORDANCE WITH PLANTER BED OR LANDSCAPE CAP DETAILS ON SHEET CD–501

LEGEND

- SITE BOUNDARY
- PARCEL BOUNDARY
- CONTOURS
- EDGE OF RIVER
- RAILROAD RIGHT OF WAY
- RAILROAD TRACKS
- OHE — OVERHEAD ELECTRIC LINE
- UP #30 — UTILITY POLE
- CB — CATCH BASIN
- DMH — DRAINAGE MANHOLE
- HYDRANT
- WV — WATER VALVE
- GV — GAS VALVE
- MON. WELL — MONITORING WELL

No.	DATE	DESCRIPTION	DESIGNER	REVIEWER
1.			XX/XX	XX

SEAL

SEAL
COMMONWEALTH OF MASSACHUSETTS
SHAWN M. MARTIN
CIVIL
No. 41675
REGISTERED PROFESSIONAL ENGINEER
1/31/12

SCALE:
HORZ.: 1"=20'
VERT.:
DATUM:
HORZ.:
VERT.: NGVD29
20 10 0 20
GRAPHIC SCALE

FUSS & O'NEILL
317 IRON HORSE WAY, SUITE 204
PROVIDENCE, RI 02908
401.861.3070
www.fando.com

TOWN OF BROOKFIELD

SITE PLAN

MILL STATION PARK

59-67 MILL STREET BROOKFIELD, MASSACHUSETTS

PROJ. No.: 20110847A10
DATE: JANUARY 31, 2012

CS-101

File Path: J:\DW\GIP2011\0847A10\Civil\Plan\20110847A10_STP01.dwg, Layout: CS-101, Plotted: Tue, Jan 31, 2012 - 2:40 PM User: lburton
Plotter: L:\ACAD2011\PLOTTERS\DWG TO PDF.PC3 CTB File: FO 2008 MONO.CTB
MS VIEW:
LAYER STATE:

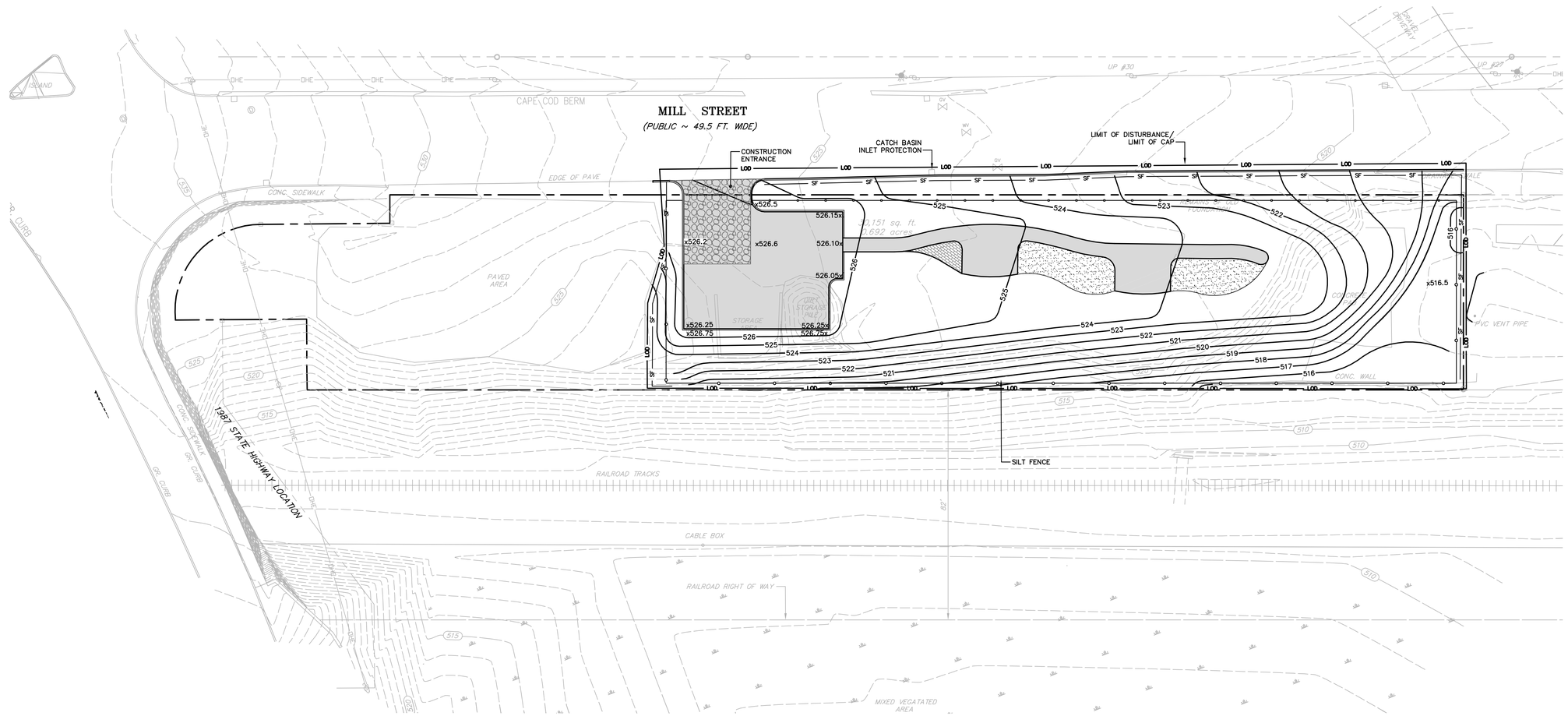

LEGEND

- SITE BOUNDARY
- PARCEL BOUNDARY
- CONTOURS
- EDGE OF RIVER
- RAILROAD RIGHT OF WAY
- RAILROAD TRACKS
- OHE — OVERHEAD ELECTRIC LINE
- UP #30 — UTILITY POLE
- CB — CATCH BASIN
- DMH — DRAINAGE MANHOLE
- HYDRANT
- WV — WATER VALVE
- GV — GAS VALVE
- MON. WELL — MONITORING WELL

No.	DATE	DESCRIPTION	DESIGNER	REVIEWER
1.			XX/XX	XX

SEAL

SEAL: COMMONWEALTH OF MASSACHUSETTS — SHAWN M. MARTIN — CIVIL — No. 41675 — REGISTERED PROFESSIONAL ENGINEER — 1/31/12

SCALE:
HORZ.: 1"=20'
VERT.:
DATUM:
HORZ.:
VERT.:
20 10 0 20
GRAPHIC SCALE

FUSS & O'NEILL
317 IRON HORSE WAY, SUITE 204
PROVIDENCE, RI 02908
401.861.3070
www.fando.com

TOWN OF BROOKFIELD

GRADING PLAN

MILL STATION PARK

59-67 MILL STREET — BROOKFIELD, MASSACHUSETTS

PROJ. No.: 20110847A10
DATE: JANUARY 31, 2012

CG-101

File Path: J:\DWG\P\20110847\A10\Civil\Plan\20110847A10_GRA01.dwg, Layout: CG-101, Plotted: Tue, Jan 31, 2012 - 2:45 PM User: lburton
Plotter: L:\ACAD2011\PLOTTERS\DWG TO PDF.PC3 CTB File: FO 2008 MONO.CTB
MS VIEW:
LAYER STATE:

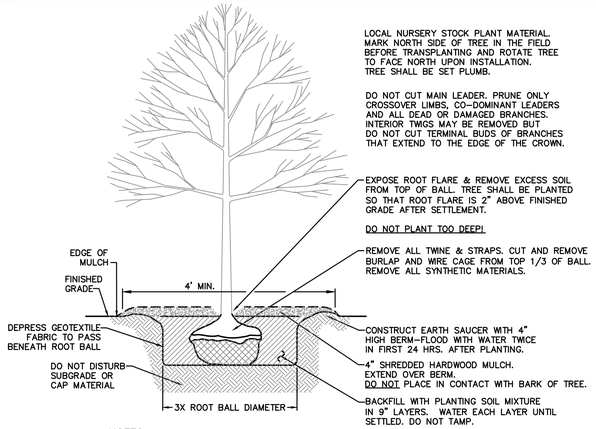

NOTES:
1. STAKES & GUYS SHALL NOT BE USED.
2. SPRAY WITH ANTIDESICCANT IN ACCORDANCE WITH MFG'S INSTRUCTIONS IF FOLIAGE IS PRESENT.

TREE PLANTING DETAIL
NOT TO SCALE

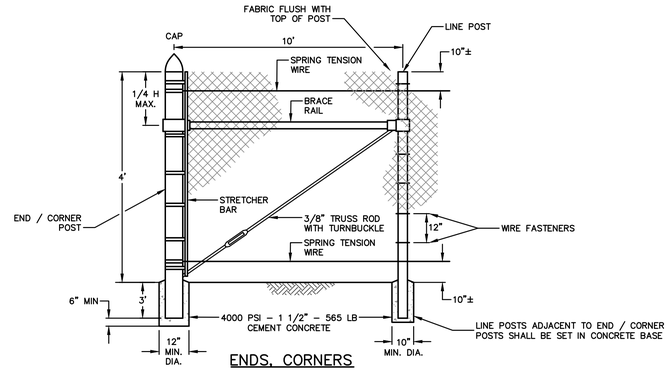

ENDS, CORNERS

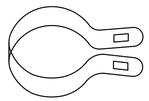

SPRING TENSION WIRE
MINIMUM OF (5) TURNS AROUND THE SPRING TENSION WIRE TO END INSTALLATION. ALL BANDS SHALL BE ROUND ON ROUND POSTS.

END BAND

NOTES:
1. FABRIC FOR FENCE: TOP SELVAGE TO HAVE KNUCKLED FINISH, BOTTOM SELVAGE TO HAVE TWISTED AND BARBED FINISH UNLESS OTHERWISE NOTED.
2. GRADE OF FENCE TO BE PARALLEL WITH THE GRADE OF GROUND.
3. FOR DESCRIPTION, MATERIAL AND CONSTRUCTION METHODS, SEE SPECIFICATIONS.
4. SPRING TENSION WIRE TO BE FASTENED TO FABRIC WITH 11 GAUGE HOG RINGS AT 1' INTERVALS.
5. SPRING TENSION WIRE TO BE FASTENED TO LINE POSTS WITH CLIPS.
6. LINE POST TO BE DRIVEN EXCEPT WHERE NOTED ABOVE.

CHAIN LINK FENCE
NOT TO SCALE

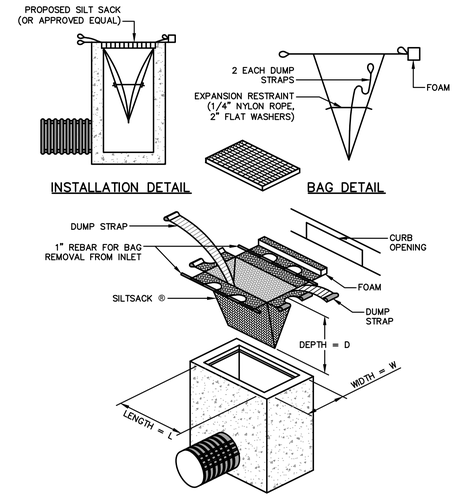

CATCH BASIN INLET PROTECTION
NOT TO SCALE

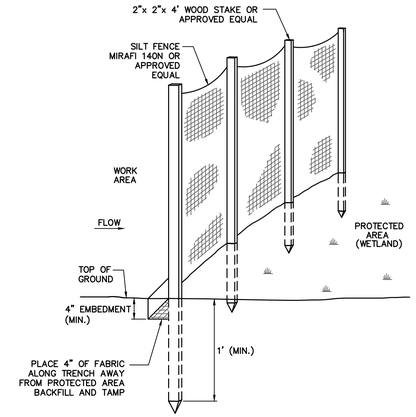

SILT FENCE
NOT TO SCALE

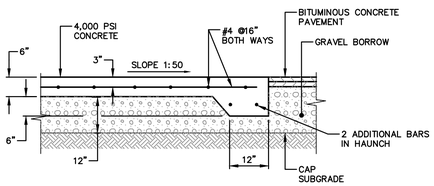

CONCRETE PAD FOR PICNIC TABLE AND BENCHES
NOT TO SCALE

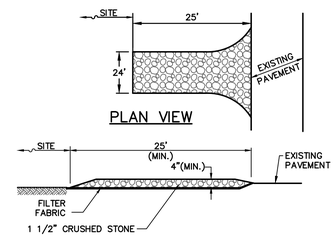

CROSS-SECTION

CONSTRUCTION ENTRANCE
NOT TO SCALE

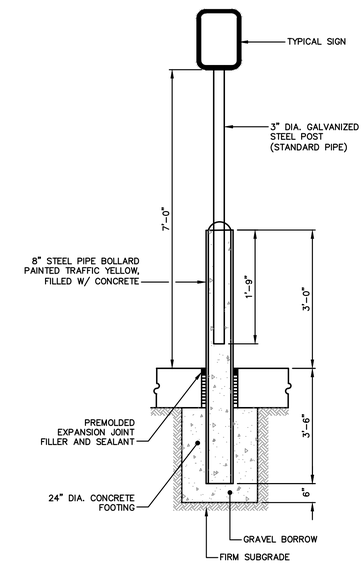

HANDICAP SIGN BASE
NOT TO SCALE

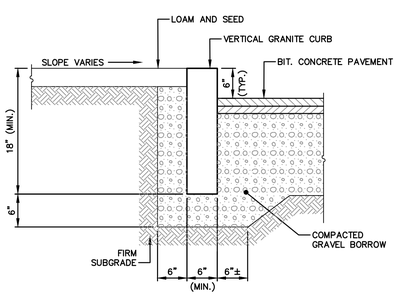

VERTICAL GRANITE CURB
NOT TO SCALE

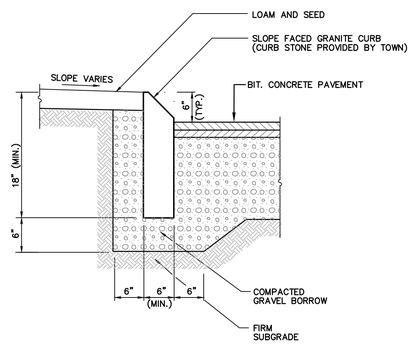

SLOPED FACED GRANITE CURB
NOT TO SCALE

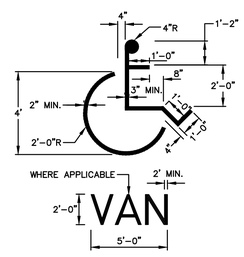

SYMBOL SHALL BE SOLID WHITE FAST-DRYING WATERBORNE PAINT AND BE CENTERED IN THE PARKING STALL. FOR VAN ACCESSIBLE SPACES, THE WORD "VAN" SHALL BE PAINTED ADJACENT TO HANDICAPPED SYMBOL (AS SHOWN ON DETAIL ABOVE).

ADA PARKING STALL SYMBOL
NOT TO SCALE

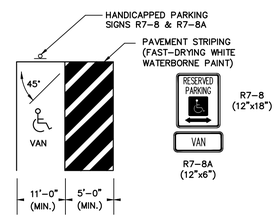

ADA PARKING STALL LAYOUT
NOT TO SCALE

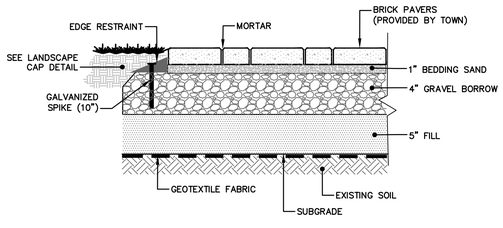

BRICK WALKWAY CAP
NOT TO SCALE

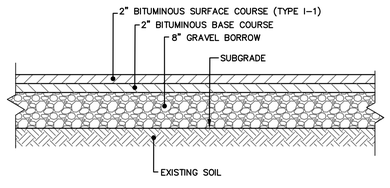

BITUMINOUS CONCRETE PAVEMENT CAP
NOT TO SCALE

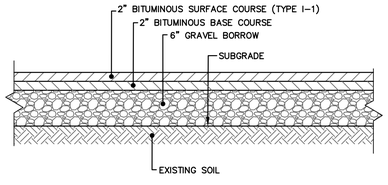

BITUMINOUS CONCRETE WALKWAY CAP
NOT TO SCALE

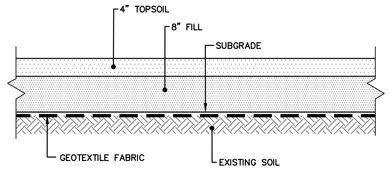

LANDSCAPE CAP
NOT TO SCALE

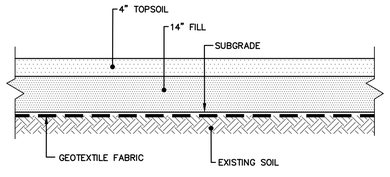

PLANTER BED CAP
NOT TO SCALE

No.	DATE	DESCRIPTION	DESIGNER	REVIEWER
1.			XX/XX	XX

SEAL

SEAL
COMMONWEALTH OF MASSACHUSETTS
SHAWN M. MARTIN
CIVIL
No. 41675
REGISTERED PROFESSIONAL ENGINEER
1/31/12

SCALE:
HORZ.: 1"=20'
VERT.:
DATUM:
HORZ.:
VERT.:
20 10 0 20
GRAPHIC SCALE

FUSS & O'NEILL
317 IRON HORSE WAY, SUITE 204
PROVIDENCE, RI 02908
401.861.3070
www.fando.com

TOWN OF BROOKFIELD

DETAILS

MILL STATION PARK

59-67 MILL STREET BROOKFIELD, MASSACHUSETTS

PROJ. No.: 20110847A10
DATE: JANUARY 31, 2012

CD-501

File Path: J:\DWG\P2011\0847A10\Civil\Plan\20110847A10_DET01.dwg, Layout: CD-501, Plotted: Tue, Jan 31, 2012 - 2:40 PM User: lburton
Plotter: DWG TO PDF.PC3 CTB File: FO 2008 MONO COVER.CTB
LAYER STATE:
MS VIEW:

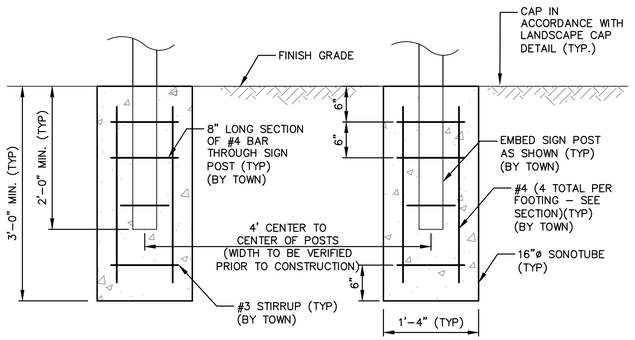

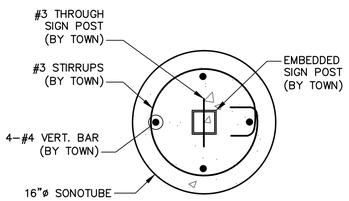

NOTES:

1. CONTRACTOR SHALL VERIFY DISTANCE BETWEEN SONOTUBES WITH TOWN PRIOR TO INSTALLATION.
2. CONTRACTOR SHALL VERIFY LOCATION OF SIGN FOOTINGS TOWN TO INSTALLATION.

MILL STATION PARK SIGN FOOTING

NOT TO SCALE

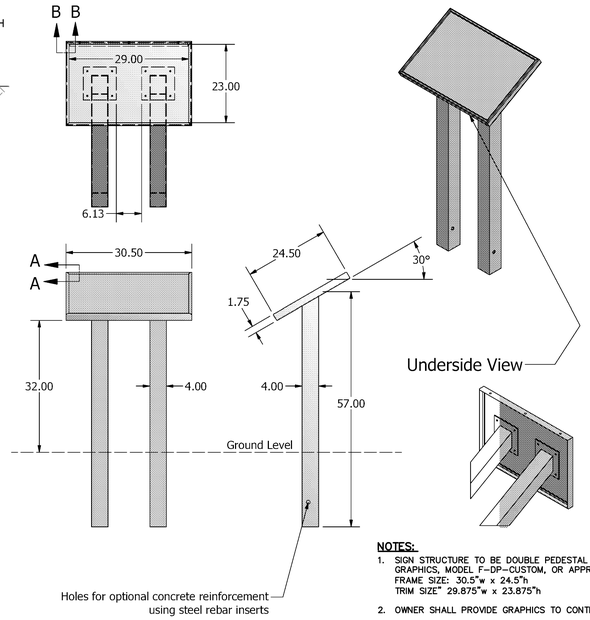

NOTES:

1. SIGN STRUCTURE TO BE DOUBLE PEDESTAL EXHIBIT BASE BY PANNER GRAPHICS, MODEL F–DP–CUSTOM, OR APPROVED EQUAL.
   FRAME SIZE: 30.5"w x 24.5"h
   TRIM SIZE" 29.875"w x 23.875"h
2. OWNER SHALL PROVIDE GRAPHICS TO CONTRACTOR FOR SIGN.
3. COLOR OF SIGN BASE SHALL BE BENJAMIN MOORE ESSEX GREEN, OR APPROVED EQUAL. FINISH SHALL BE EGGSHELL.

DOUBLE PEDESTAL INTERPRETIVE SIGN

NOT TO SCALE

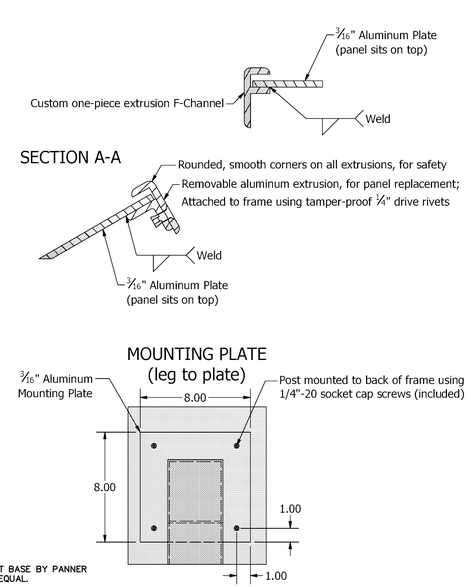

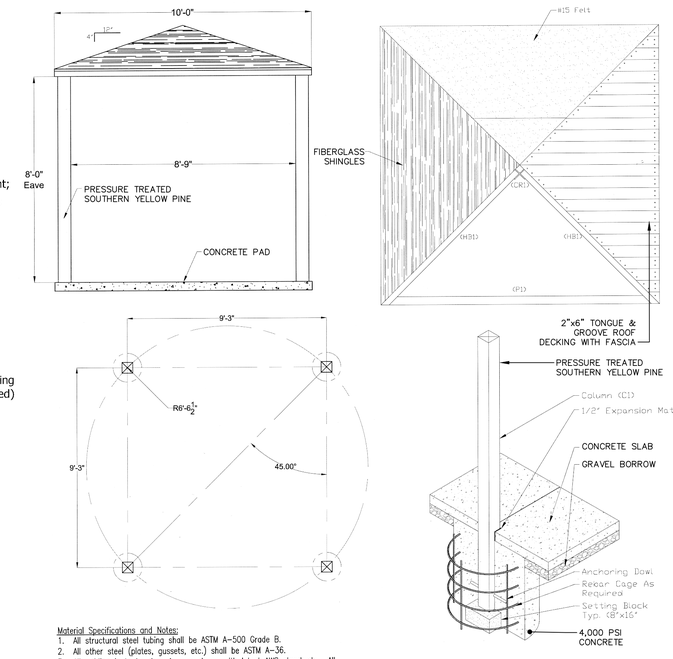

Material Specifications and Notes:

1. All structural steel tubing shall be ASTM A–500 Grade B.
2. All other steel (plates, gussets, etc.) shall be ASTM A–36.
3. All welding is to be done in accordance with latest AWS standards. All welds are to develop full strength of component parts. (E7081 Electrodes)
4. All bolts to be ASTM A–325 & threaded rod to be ASTM B–7.
5. All fabricated steel & structural tubes to be sand blasted to a white condition
   Electrostatic Special Epoxy TGIC Primer Applied – 3 mils.
   Electrostatic Epoxy TGIC "Top Coat" Powder Coat Applied – 3 mils.
   Final cure of coating at 450 degrees for 30 to 45 minutes.
6. Roofing Materials– 2"x6" (Nom) SYP #2 Grade Tongue & Groove w/ Fiberglass Shingles.

ERECTION NOTES:
All members must be properly braced until the complete structural system has been constructed.

NOTE:
PICNIC TABLE SHELTER SHALL BE SII STRUCTURES 10'X10' ALL PINE SQUARE STRUCTURE, OR APPROVED EQUAL.

PICNIC TABLE SHELTER

NOT TO SCALE

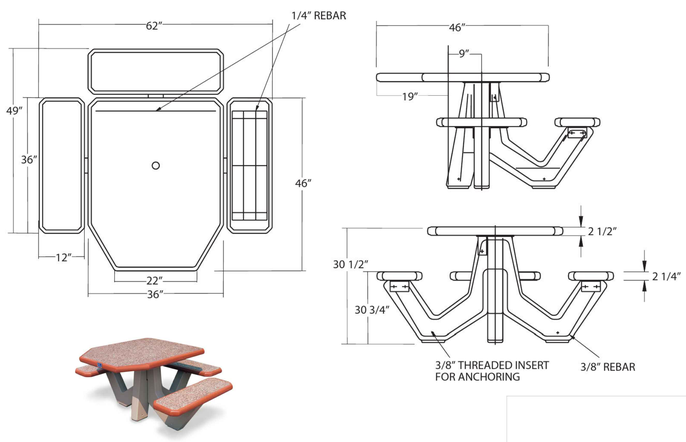

Size:	64" x 52" x 30" H installed.
Weight:	950 lbs.
Seating Capacity:	8 persons.
Material:	Reinforced concrete.
Reinforcing:	1/4" & 3/8" Dia. steel rebar.
Hardware:	(1)-Table-to-leg bracket. (6)- Seat-to-leg brackets. (6) - 3/8" Dia. x 5 1/2" hex screws. (12) - 3/8" x 7/8" O.D. F/W (6) - 3/8" locking hex nuts. (4) - Neoprene pads. (20) - 3/8" Dia. x 1-1/4" hex flange screws. (1) - 1/8" x 3" Keeper Pin.
Frame (legs):	(1) - top interlocking leg. (1) - bottom interlocking leg.
Top:	(1) - 36" Sq. x 2".
Benches:	(3) - Benches 34" L x 12" W x 2" H.
Optional Anchoring:	(4) - 3/8" x 1-1/2" inserts (angle-brackets not provided).
Standard:	(1) - 1-9/16" Dia. x 2" pop-out plug in table top for umbrella pole.
Assembly:	Do not over tighten bolts or inserts will pull out.
Maintenance:	Periodically rinse with water and mild detergent. Re-seal annually or as needed.
Packaging:	Packaged un-assembled in crate, and shrink wrapped in plastic.

NOTES:

1. PICNIC TABLE BELSON OUTDOORS UNIVERSAL ACCESS CONCRETE PICNIC TABLE MODEL # TF31237, OR APPROVED EQUAL.
2. COLOR SHALL BE BRICK RED

PICNIC TABLE

NOT TO SCALE

Size:	72"L x 20"W x 18"H
Weight:	940 lbs.
Material:	Reinforced Concrete.
Reinforcing:	½" & 3/8" Dia. steel rebar.
Hardware:	(4) – ½" Dia. threaded inserts.

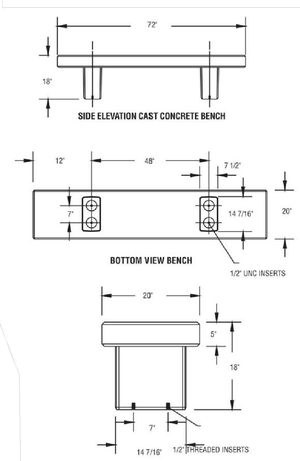

NOTES:

1. PARK BENCH BELSON OUTDOORS CLASSIC PRECAST CONCRETE PARK BENCH MODEL # TF5029, OR APPROVED EQUAL.
2. COLOR SHALL BE FRENCH GRAY WEATHERSTONE FINISH.

PARK BENCH

NOT TO SCALE

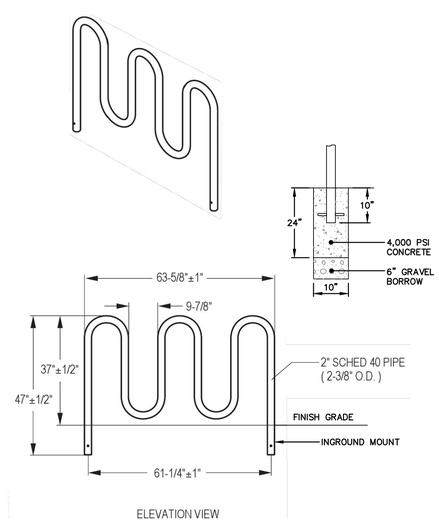

NOTES:

1. BIKE RACK SHALL BE BELSON OUTDOORS HEAVY–DUTY CHALLENGER/WAVE BIKE RACK, 5 LOOPS 7 BIKES MODEL # H36–7–P–IG, OR APPROVED EQUAL
2. COLOR SHALL BE BLACK.

BIKE RACK

NOT TO SCALE

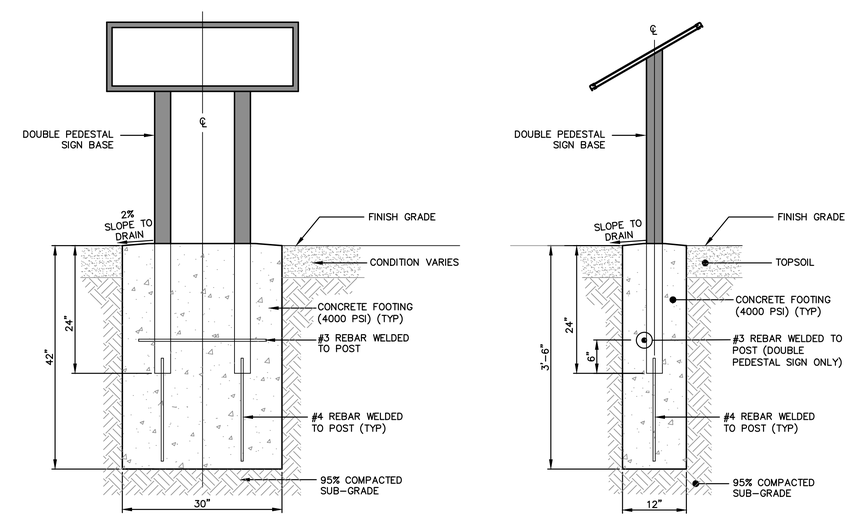

FRONT ELEVATION

DOUBLE PEDESTAL SIDE ELEVATION

INTERPRETIVE SIGN FOOTING

NOT TO SCALE

No.	DATE	DESCRIPTION	DESIGNER	REVIEWER
1.			XX/XX	XX

SEAL

SEAL

COMMONWEALTH OF MASSACHUSETTS
SHAWN M. MARTIN
Civil
No. 41675
REGISTERED PROFESSIONAL ENGINEER
1/31/12

SCALE:
HORZ.: 1"=20'
VERT.:
DATUM:
HORZ.:
VERT.:
20 10 0 20
GRAPHIC SCALE

FUSS & O'NEILL
317 IRON HORSE WAY, SUITE 204
PROVIDENCE, RI 02908
401.861.3070
www.fando.com

TOWN OF BROOKFIELD

DETAILS

MILL STATION PARK

59-67 MILL STREET BROOKFIELD, MASSACHUSETTS

PROJ. No.: 20110847A10
DATE: JANUARY 31, 2012

CD-502

File Path: J:\DWG\P20110847A10\Civil\Plan\20110847A10_DET01.dwg, Layout: CD-502, Plotted: Tue, Jan 31, 2012 - 2:40 PM User: lburton
Plotter: DWG TO PDF.PC3 CTB File: FO 2008 MONO COVER.CTB
LAYER STATE:
MS VIEW:

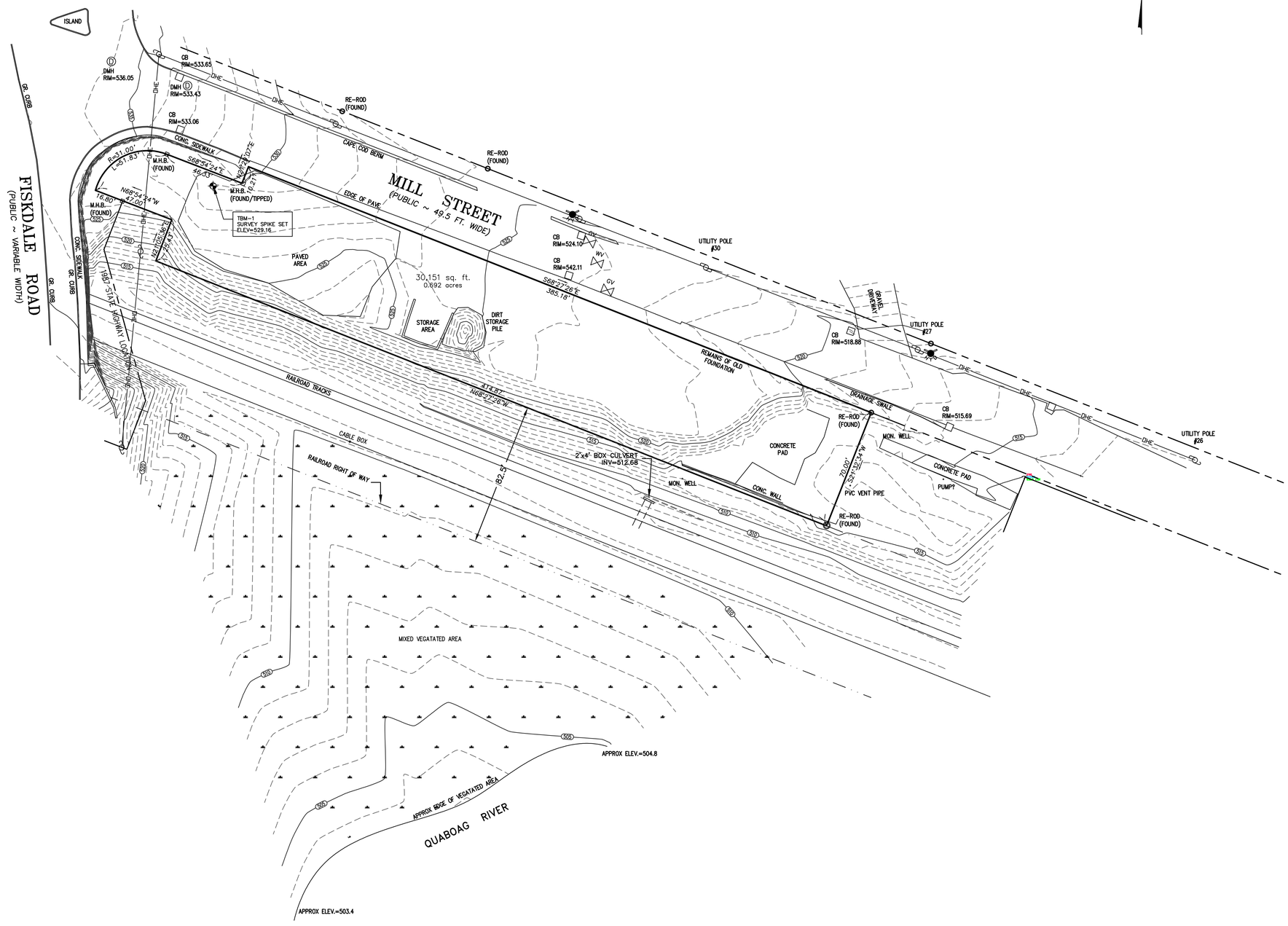

NOTES:

* THIS PLAN WAS PREPARED WITHOUT THE BENEFIT OF A TITLE REPORT AND IS SUBJECT TO ANY FINDINGS SUCH A REPORT MIGHT DISCLOSE.
* LOCATION OF ALL UNDERGROUND UTILITIES SHOWN HEREON ARE APPROXIMATE AND ARE BASED ON THE FIELD LOCATION OF ALL VISIBLE STRUCTURES SUCH AS CATCH BASINS, MANHOLES, WATER GATES, ETC. AND COMPILING INFORMATION FROM PLANS SUPPLIED BY VARIOUS UTILITY COMPANIES AND GOVERNMENT AGENCIES. IN ACCORDANCE WITH CHAPTER 82 SECTION 40 INCLUDING AMENDMENTS ALL CONTRACTORS SHOULD NOTIFY IN WRITING ALL UTILITY COMPANIES AND GOVERNMENT AGENCIES PRIOR TO ANY EXCAVATION WORK OR CALL DIG-SAFE AT 1-888-344-7233.
* CO-ORDINATES ARE BASED ON STATE PLANE CO-ORDINATE SYSTEM LOCATED BY GPS ON AUGUST 26, 2009. ELEVATION DATUM=NGVD29.

REFERENCES:

DEED BOOK 30374 PAGE 14
PLAN BOOK 795 PLAN 62
PLAN BOOK 580 PLAN 49
PLAN BOOK 28 PLAN 15
ASSESSORS REFERENCE: MAP 6C-2 PARCEL 105

ZONING:

BUSINESS

ALL ABOVE DEEDS AND PLANS ARE RECORDED WITH THE WORCESTER DISTRICT REGISTRY OF DEEDS.

GRAPHIC SCALE
1"=30'
30 0 30 60 90

REGISTERED LAND SURVEYOR DATE

B&R SURVEY, INC.

100 GROVE STREET
WORCESTER, MA 01605
TEL 508-756-8579
FAX 508-421-4797

EXISTING CONDTIONS SITE PLAN

PREPARED FOR:
THE TOWN OF BROOKFIELD

MILL STREET
BROOKFIELD, MASSACHUSETTS

SCALE: 1"=30' DATE: SEPTEMBER 21, 2009

FIELD: RJS	CALC: RPB	CHECK: RJS
SHEET 1 OF 1	F.B. N/A	JOB #09-227