EPA CONTRACT NO. 68-W6-0042
EPA WORK ASSIGNMENT NO. 106-SIBZ-01ZZ

EPA Project Officer: Diana King
EPA Work Assignment Manager: Jim Byrne

TARGETED BROWNFIELDS ASSESSMENT
FINAL REPORT

54-67 MILL STREET
BROOKFIELD, MASSACHUSETTS

November 2002

Prepared By:

Metcalf & Eddy
30 Harvard Mill Square
Wakefield, Massachusetts

Metcalf & Eddy

TABLE OF CONTENTS

1.0 INTRODUCTION 1

2.0 BACKGROUND INFORMATION AND SITE OVERVIEW 2
- 2.1 Site Location 2
- 2.2 Site History and Use 2
- 2.3 Site Features and Utilities 4
- 2.4 Environmental Studies and Information 4
- 2.5 Adjacent/Nearby Properties 5

3.0 SITE INVESTIGATION AND FIELD OBSERVATIONS 7
- 3.1 Geophysical Survey 7
- 3.2 Test Pit Investigation 7
- 3.3 Soil Borings 8
- 3.4 Groundwater Sampling 8
- 3.5 Analytical Program 9
- 3.6 Geologic and Hydrogeologic Conditions 10

4.0 ANALYTICAL DATA EVALUATION 11
- 4.1 Former Building Footprint 11
- 4.2 Surface and Subsurface Soil from Soil Borings 12
- 4.3 Groundwater 13

5.0 CONCLUSIONS 15
- 5.1 Underground Storage Tank 15
- 5.2 Former Building Footprint 15
- 5.3 Site-wide Soils and Groundwater 15

6.0 RECOMMENDATIONS 16
- 6.1 UST Removal 16
- 6.2 Existing RTN 2-10354 and Notification to MADEP 16
- 6.3 Tier Classification and Phase I Report 17
- 6.4 Remedial Action and Response Action Outcome 17
- 6.5 Phase II, Phase III, and Phase IV Submittals 21
- 6.6 Solid Waste Regulations 22
- 6.7 Limitations 22

7.0 REFERENCES 24

APPENDICES

APPENDIX A. SITE PHOTOS
APPENDIX B. MADEP SITE SCORING MAP
APPENDIX C. GEOPHYSICAL SURVEY REPORT
APPENDIX D. TEST PIT, GEOLOGIC, AND WELL INSTALLATION LOGS
APPENDIX E. SAMPLING WORKSHEETS
APPENDIX F. DATA VALIDATION MEMORANDA
APPENDIX G. STATEMENT OF LIMITATIONS

LIST OF FIGURES AND TABLES

Figure 1 Site Investigation Plan

Table 3-1 Summary of Sampling Locations and Analyses

Table 4-1 Summary of Analytical Data – Soil from Test Pits
Table 4-2 Summary of Analytical Data – Soil from Borings
Table 4-3 Summary of Analytical Data – Groundwater

Table 6-1 Planning Level Cost Estimate for Soil Stabilization and Reuse Option and MCP Compliance Activities
Table 6-2 Planning Level Cost Estimate for Soil Cap Option and MCP Compliance Activities

1.0 INTRODUCTION

The Targeted Brownfields Assessment (TBA) report for the properties collectively known as the Mill Street property (street numbers 54 through 67 Mill Street) has been prepared in accordance with Metcalf & Eddy's (M&E's) EPA-approved Field Task Work Plan (FTWP; M&E, 2002a) for conducting the TBA under EPA's Response Action Contract (RAC). The Mill Street properties (the site) are located on Mill Street, just north of the former Boston and Albany railroad tracks (now operated by CSX) on the southern edge of the business district of Brookfield, Massachusetts.

The overall objectives of the TBA for the Mill Street site were to:

1) review and summarize background information related to the site;

2) collect and analyze soil samples from selected areas across the site, including locations within the former mill building footprint, to assess the potential for historical releases and/or releases resulting from the mill building fire and subsequent demolition;

3) install four temporary groundwater monitoring wells to assess the potential impact to groundwater from historical site use and/or nearby release sites; collect and analyze groundwater samples;

4) re-sample one previously installed well (installed in 1991), from which a groundwater sample was collected in 1991 that had a concentration of cadmium in excess of the reportable concentration

5) develop potential alternatives for additional site assessment and/or potential cleanup options, if warranted.

The TBA for the Mill Street site was initiated by reviewing reasonably available information that was relevant to an environmental assessment of the site including ownership history, use and operations history, and regulatory history. In addition, pertinent information on surrounding or nearby properties was reviewed. Information on current site conditions and the presence of contaminants was obtained from site visits and samples collected during the TBA field investigation conducted by M&E. The information presented herein is designed to meet the objectives of the TBA developed for the site. This report, in conjunction with the Background Summary Memorandum (M&E, 2002b), incorporates many of the requirements of a Phase I report as defined under the Massachusetts Contingency Plan (MCP), 310 CMR 40.0483.

2.0 BACKGROUND INFORMATION AND SITE OVERVIEW

Information presented in this section summarizes site history and site conditions, including a discussion of previous environmental investigations and activities that occurred at the site. A summary of site history was previously included in the Background Summary Memorandum (M&E, 2002b). Field observations made by M&E during the TBA are also included in this section. Selected photos are presented in Appendix A.

2.1 Site Location

The Mill Street properties (the site) are located on Mill Street, just north of the former Boston and Albany railroad tracks (now operated by CSX) on the southern edge of the business district of Brookfield, Massachusetts. The site includes four parcels of land covering approximately ten acres on either side of Mill Street, between Bridge Street and Upper River Street (to the west) and Kimball Street (to the east) (Figure 1). The parcels are currently owned by the Mill Street Brookfield Realty Corporation. The town of Brookfield is considering acquisition of portions of the parcels for possible use as a senior center, library, and/or public works facility. The former Brookfield Mill, a four-story wooden structure, was located on a smaller parcel on the south side of Mill Street. The building was destroyed in a fire in August, 2000. The one parcel south of Mill Street is bordered by the Spencer Plating property to the east and the former Boston and Albany Railroad to the south, while the three parcels on the north side of Mill Street are surrounded mainly by residential properties. There are currently no structures on any part of the site, which is mostly level and partially wooded in the northern section. The groundwater at the site is classified as GW-1, in accordance with the Massachusetts Contingency Plan (MCP; 310 CMR 40.0000), due to its location within an Interim Well Head Protection Area (IWPA). The MADEP site scoring map is included as Appendix B. The former Brookfield Mill parcel is listed in the MADEP's release data base, Release Tracking Number (RTN) 2-10354.

2.2 Site History and Use

The Brookfield Mill building was built in 1893 as a shoe manufacturing and leather finishing facility by C. H. Moulton Company. In the early to mid 1900s, the building was used as a paper finishing facility where gummed paper products were prepared and stored. During this period, the building was owned first by the Ideal Coated Paper Company, and later by McLaurin-Jones Company. Sanborn fire insurance maps (1898, 1904, 1911, 1928, 1945 and 1954) indicate the presence of a coal storage shed at the east end of the mill building. No records of how long coal was used or when it was replaced by the fuel oil were available.

The mill was owned by the American Athletic Shoes Company from 1959 to 1983. Shoes were originally assembled at the mill, but later it was used as a storage facility and a leather shoe finishing plant for American Athletic Shoes.

In 1986 the property was acquired by Walter and Elizabeth Allard, who leased parts of the building to various small scale manufacturing and storage industries until 1991. These

industries included a plastic injection molding business, a manufacturer of activated charcoal filters, and several artists and hobbyists. The building was extensively used for storage by numerous companies, including the adjacent Spencer Plating, Safety Kleen, and Finney Oil Company. Inventories of chemicals and wastes stored on site by each company were not available.

A 20,000 gallon underground storage tank (UST) is located on the north side of Mill Street. The UST is thought to have held heating oil, which was pumped under the street to the mill. Although fill pipes and exposed lines give evidence as to the UST's general location, exact information regarding contents and location was not available to M&E before the TBA was conducted. The UST is not on file with the Brookfield Fire Department.

In April 1995, a notice of responsibility (NOR) was issued for the Brookfield Mill to the property owner at that time, Mr. Walter Thomas Allard, by the MADEP. The NOR was based on the results of a Limited Site Investigation conducted by Lycott Environmental Research Inc. in 1991, on behalf of the Country Bank for Savings. The conditions cited in the 1995 NOR were: groundwater concentrations of Total Petroleum Hydrocarbons (TPH) and cadmium that exceeded reportable concentrations; evidence of oil-stained soil; the location of the site within the Zone II of a public drinking water supply well; and the existence of a rare wetland species habitat within 500 feet of the site. The NOR did not specifically identify the rare species.

The Brookfield Mill parcel was assigned Release Tracking Number 2-10354 by MADEP. This site is currently classified as a default Tier 1B site because the responsible party, Mr. Allard, failed to file a Phase I Report and Tier Classification by April 1996. To M&E's knowledge, no MCP compliance activities have been conducted either by Mr. Allard or by subsequent owners of the parcel.

Other notices for the Mill Street property include notices of non-compliance issued to TJF Realty in June 1998 in relation to inspections by MADEP in September 1997 and January 1998. The inspections found illegally stored hazardous waste including 33 drums of waste oil and other EPA regulated wastes. In February 1998, TJF Realty had the drums removed under hazardous waste manifests, which are copied in MADEP files. As described in Section 2.1, the Brookfield Mill building was destroyed in a fire in August, 2000. It is unknown how much oil or hazardous materials (OHM) was being stored, if any, within the building at the time of the fire.

Historical information shows that, apart from a storage shed shown on Sanborn Maps (1893, 1898, 1904, 1928, 1945, 1954), no buildings have ever been erected on the parcel of land north of Mill Street (Lycott, 1991). The land remains partially wooded apart from an area adjacent to the road, which was cleared for use by the Massachusetts Department of Public Works (MADPW) to store machinery and vehicles used to build the Route 148 bridge (Lycott, 1991).

2.3 Site Features and Utilities

Mill Building. The site is presently devoid of buildings or structures on both the north and south sides of Mill Street. All that remains of the four-story mill building, which was completely burned down in August 2000, is the foundation and some rubble and debris on the old mill site (see photo in Appendix A). The building footprint is generally level and at the same elevation as the surrounding ground. It appears that after the fire, the remnants of the building either collapsed or were demolished, such that they now partially fill the basement. Fill material (sand) also appears to have been placed into the basement void.

According to a Phase I - Limited Site Investigation by Lycott Environmental Research (Lycott, 1991), the mill building was a wooden structure with a brick foundation and a concrete-floored basement. Lycott representatives observed two floor drains in the concrete floor of the building. The Lycott representatives were told that the drains discharged directly to the environment, rather than to the on-site septic system. A concrete containment area was also present in the basement, and was filled with an oily mixture during the Lycott site visit. It was not possible for the Lycott representatives to determine whether the containment area floor was concrete or dirt.

North of Mill Street. The area of the property cleared by the MADPW is partially paved but mostly dirt and gravel covered (Appendix A). Several pipes lie exposed in a ditch in the vicinity of the UST. These pipes were repaired by the MADPW after damage by heavy vehicles used in the bridge construction. There are no official records of any damage to the pipelines or any spills occurring on the site by the tenants, owners, or the MADPW (Lycott, 1991).

Utilities. The site is serviced by the Town of Brookfield water system, and all electricity and telephone wires are overhead. The mill had its own septic system that is believed to have also been used by Spencer Plating. Sewage from the restrooms and sinks inside the mill building and from bathrooms in the building currently housing Spencer Plating was pumped into a holding tank in the mill building. It was then directed to two septic tanks west of the building, which were pumped quarterly according to a former tenant (Lycott, 1991). Brookfield town officials state that another septic system, put in place by the DPW during the bridge construction, lies on the western edge of the mill property. In addition, the Spencer Plating facility has installed its own septic system east of the former mill building (C. McManus, personal communication, 2001), which is not on the site but which abuts it to the east.

2.4 Environmental Studies and Information

A due diligence Phase I - Limited Site Investigation was performed on the site in 1991 by Lycott Environmental Research, Inc. for the Country Bank for Savings. The assessment focused on the mill building and portions of adjacent properties to the east, west, and south (along the railroad tracks), with limited investigation north of Mill Street. The report identified large quantities of unknown oily substances stored in drums, tanks and concrete containment areas in the basement of the mill building. The basement had a concrete floor. Floor drains, a

boiler system and a septic holding tank were also found in the basement.

Outside the building, a smoke stack on the northeast corner was connected to the oil furnace system in the basement. A dark coal ash-type residue was observed around the base of the smoke stack. Another small building between the Mill and Spencer Plating contained a coal-fired furnace system. This is supported by the Sanborn Maps for the Mill Street area (1898, 1904, 1911, 1928, 1945 and 1954). The small building is no longer present at the site and was presumed to have been destroyed during the fire in August of 2000. The main loading dock was located on the western side of the mill. Another loading area on the eastern side received limited use.

Lycott reported detected levels of TPH in groundwater samples (the highest concentration being 14 ppm) as well as three of the priority pollutant dissolved metals (arsenic, cadmium and lead). TPH and cadmium concentrations exceeded the reportable concentrations in effect at that time. No PAHs were detected in the groundwater at the wells sampled.

The Lycott report concluded that, based on the levels of TPH detected in groundwater samples collected from the site, a petroleum release had possibly occurred. The report suggested the release was due to a leaking UST and/or supply pipe or from possible discharges of petroleum from vehicles and equipment stored north of Mill Street, but does not suggest the presence of a defined plume. Benzene and toluene were also detected in groundwater samples, suggestive of a release of gasoline or other petroleum at the site. The inferred direction of groundwater flow is to the south toward the Quaboag River.

As discussed previously, in April 1995 MADEP issued a Notice of Responsibility to the property owner at that time, Mr. Walter Thomas Allard, based on the results in the Lycott report. The Brookfield Mill Site was assigned RTN 2-10354. The site is currently classified as default Tier 1B because the responsible party failed to file a Phase I report and tier classification by April 1996. The property is now owned by the Mill Street Brookfield Realty Corporation, and remains a default Tier 1B site.

Based on the background review, M&E identified five potential areas of concern at the site including groundwater, debris, surface and subsurface soils, former coal storage areas and USTs. The former mill building footprint and the UST location were targeted for investigation during the TBA. It was considered possible that stored oil and waste oil products and site septic systems in the former mill building could have impacted site soil and groundwater. The mill building footprint was also a concern with respect to the presence of metals and miscellaneous contaminants in the rubble and debris remaining from the fire which destroyed the building. The other major area of concern was the UST and associated underground fuel-oil transmission line.

2.5 Adjacent/Nearby Properties

Information collected for the Background Summary Memorandum (M&E, 2002b) indicates no nearby properties with reported releases. While the Lycott report identified a property north of

the site, on Pleasant Street, as a potential property of concern (Lycott, 1991), the exact address was not given, and no files at the MADEP were found, nor were any properties on Pleasant Street identified in the Environmental Data Resources Inc., (EDR) report. Spencer Plating, the facility abutting the east side of the southern parcel, is the only adjacent or nearby property considered as a potential concern due to the history of the property sharing a septic system with the former mill, and the use of solvents during the manufacturing procedures.

Spencer Plating, Inc., is located at 55 Mill Street (previously 116 Mill Street). The facility is housed in a two-story brick building which was purchased by George Beer approximately 10 years ago and was previously owned by S & S Coating (a box manufacturing company). Operations carried out by Spencer Plating include the buffing and grinding or powder coating of metal parts to provide a high purity, mirror finish or protective coating. Parts are degreased prior to powder coating using 1,1,1-trichloroethane (1,1,1-TCA) and trichloroethylene (TCE). Metals processed at the facility are steel and occasionally stainless steel or brass. The only water used in the process is non-contact cooling water used in the cooling jacket of the degreaser. Solid waste generated at the facility is debris from buffing, mainly steel.

Spencer Plating was previously listed as a Large Quantity Generator of hazardous waste because of the on site storage of a large quantities of 1,1,1-TCA and TCE. However, in June 1999 Spencer Plating requested a change in status to a Small Quantity Generator.

3.0 SITE INVESTIGATION AND FIELD OBSERVATIONS

Field activities were performed at the Mill Street site in June 2002 in accordance with the M&E Field Task Work Plan (FTWP) for the site (M&E, 2002a). The field investigation focused on potential areas of concern identified during the background review. The investigation included:

- Geophysical survey to identify UST location
- Test pit investigation of former building footprint, with soil sampling and analysis
- Soil borings, including surface and subsurface soil sampling and analysis
- Temporary groundwater well installation and development
- Groundwater monitoring and sampling

Figure 1 presents the property and field investigation locations. Table 3-1 summarizes the samples collected and analyses performed. The geophysical survey report is included in Appendix C. Logs for the test pits and soil borings, and monitoring well construction logs, are included in Appendix D. The analytical data from soil and groundwater analyses are presented and discussed in Section 4.0. The investigation efforts are described below.

3.1 Geophysical Survey

An area of approximately 200 square feet was surveyed by Hager GeoScience, under subcontract to M&E, to more accurately locate the UST north of Mill Street (see Figure 1 and Appendix C). Based on the survey, a structure (likely the UST) was discovered, with approximate dimensions of 20 feet long and 15 feet wide. Its location was marked on the pavement using permanent paint. Location of the UST was a main objective of the TBA, because it was suspected that the UST or its transmission line may have leaked. Also, if the town of Brookfield acquires the property, the town will want to remove the UST before re-developing the property. No excavation was conducted to confirm its size or condition.

3.2 Test Pit Investigation

Four (4) test pits were dug in the footprint of the former mill building (destroyed by fire in August 2000), to characterize the soils and debris present in the basement of the building after the burned building shell was demolished. Possible sources of contamination in the soils include ash from the fire that destroyed the building, as well as residues from materials and machinery present in the building before it burned (for example, waste oil or possibly PCB-containing machinery or electrical devices). The re-development plan for this area is to possibly construct a parking area or new building on the former mill building footprint. The parking area or new building will be for municipal use, should the town acquire the property.

The approximate locations of the pits are shown on Figure 1 (TP-1, TP-2, TP-3, and TP-4). The test pit logs (Appendix D) document the presence of sandy loam mixed with ash and various debris (e.g. pipes, bricks, wires, small equipment pieces, a small transformer-like device, and partially burned vinyl flooring and wood) in the subsurface.

Six test pit soil samples were collected (see Table 3-1) with analysis of each sample for petroleum hydrocarbons (VPH and EPH), PCBs, total metals (EPA target analyte list), and TCLP metals. Data from the test pit soil sample analyses are presented in Table 4-1 and discussed in Section 4.0.

3.3 Soil Borings

Soil borings were advanced by alternately advancing split spoon samplers and 4 ¼-inch hollow stem augers using a drill rig. Two-foot long split spoons were used to collect continuous soil samples from each location. The soil samples were logged and characterized. Observations also included visual appearance and jar-headspace screening using a photoionization detector (PID). A total of four borings were advanced across the site. Approximate locations are shown on Figure 1. Boring logs are included in Appendix D.

Surface soil samples (approximately 1 to 4 feet below ground surface (bgs)) and subsurface soil samples (approximately 4 feet bgs to the end of the boring) were collected for analysis as shown in Table 3-1. These samples were submitted for laboratory analyses for VPH, EPH and total metals. These analytes were selected based on a previous site assessment (Lycott, 1991), which documented the detection of petroleum hydrocarbons and certain metals in site soils and groundwater and ultimately led to listing of the site with the MADEP as Release Tracking Number 2-10354. Surface and subsurface soil analytical data are presented and discussed in Section 4.0.

3.4 Groundwater Sampling

Four overburden monitoring wells were installed at the site during the field investigation. The wells are identified as ME-1, ME-2, ME-3, and ME-4 on Figure 1 and were constructed using two-inch schedule-40 flush joint PVC. Each well was screened across the water table with a 10-foot section of 20-slot PVC well screen and was brought flush to grade with a solid PVC riser that was capped and housed in a six inch gate box. The annulus backfill consisted of a sand pack in the annular space around the screened PVC to approximately 2 feet above the top of the well screen, approximately 0.5-1 foot of hydrated bentonite, and an additional 6 inches of sand. The remaining annular space was taken up by the concrete pad in which the gate box was set. Groundwater depth at these wells was measured between 0.5 and 7 feet bgs.

Well development was completed following installation of the wells. The Lycott well MW-5 was also located and developed for sampling. The other Lycott wells were not located and are presumed to have been destroyed. During well development, the purge water was monitored for temperature, pH, conductivity and turbidity. Non-aqueous phase liquids (NAPL) and odors were not observed in any well. In addition, headspace readings on a PID from within the wells were all non-detect.

The wells were sampled using the EPA low-flow method for the analyses shown in Table 3-1. Lycott well MW-5 was sampled for metals only, due to previous detections of certain metals in

a sample from this well, as reported by Lycott. The samples were collected, packed in ice, and shipped to the laboratories the day after they were collected. Sampling worksheets are included in Appendix E.

3.5 Analytical Program

Samples were analyzed using a combination of EPA's Contract Laboratory Program (CLP) for Routine Analytical Services (RAS) and directly-subcontracted laboratories. The methodologies selected for analysis of samples by the directly-subcontracted laboratory were consistent with standard EPA or MADEP methods. Quality control (QC) samples were also collected and submitted for laboratory analysis to monitor and evaluate laboratory and sampling performance. The field QC samples collected included trip blanks, field duplicates, and matrix spike/matrix spike duplicate samples.

M&E conducted a limited QC review/validation of analytical laboratory data in accordance with the EPA-approved FTWP (M&E, 2002a). The review/validation provides an overview of the laboratory and field QC data by identifying potential QC issues and assessing common QC criteria that might affect reporting and usability of the environmental data, as well as verifying that the laboratory has met minimum data acceptance criteria established by M&E. Although the limited review/validation was based on EPA Region I data validation guidelines (U.S. EPA, 1996), it was more limited in scope. The review/validation performed by M&E consisted of completing Tier II-like forms only for applicable criteria parameters, assessing data usability, and summarizing the results in abbreviated Tier II-like memoranda. The validation memoranda are included in Appendix F.

Data found to be suspect during the validation/review process were qualified. Laboratory data forms were revised by hand to indicate any validation qualifications that supersede laboratory qualifiers and are included in the data validation memoranda. The final validation qualifiers are consistent with EPA validation guidelines. Positive results that were shown to exhibit poor precision or accuracy were qualified as approximated and flagged with a "J." Nondetect results were flagged with a "UJ" if the associated QC data did not meet applicable criteria. Positive results were not qualified if they were found to meet all validation criteria. Nondetect results that were found to meet the validation criteria were shown as the quantitation limit or detection limit followed by a "U" qualifier. Sample data that failed to meet associated QC criteria would have been rejected and flagged with an "R" using EPA data validation guidelines; however, it was not necessary to reject any sample data collected during this investigation. All sample data were judged to be usable for further evaluations.

Of the validation actions taken, of note was the poor field duplicate agreement for copper in sample TP-2-B and its field duplicate. One sample had a reported copper concentration of 6,380 mg/kg, and the other reported concentration was 308 mg/kg, a factor of 200 difference. The reason for this large variation is not known. Considering the many uses of the former mill building, the possibility of fine copper particles being present in the test pit soils cannot be discounted. Wire was stored in the building at one time, and various wires, pipes and small machine parts were uncovered during test pit excavation.

An evaluation of the analytical data for test pit soils, site-wide soils, and groundwater is presented in the following section (4.0).

3.6 Geologic and Hydrogeologic Conditions

The area north of Mill Street (consisting of 3 separate parcels) contains no buildings or structures and is predominantly a gravel parking lot, with a small paved area in the vicinity of an underground storage tank. The parcel south of Mill Street contains the remains of a foundation and basement floor (reported to have been concrete) from the old mill building that was destroyed by fire. The basement void is currently filled with debris from the fire and sandy fill. The floor of the foundation is not entirely filled and is exposed on the south and east sides of the former building. The southern and eastern foundation walls have deteriorated. South of the foundation there is a drainage trench and a culvert, underlying the Boston and Albany railroad tracks, that connects the drainage to the Quaboag River and wetlands to the south. Lycott (1991) reported that the drainage trench was installed by the railroad to reduce flooding of the tracks. The overall topography of the site is gently sloping towards the southeast. Surface water runoff from the area north of Mill Street is south, towards the street. Drainage from the area south of Mill Street is to the south-southeast, into the railroad drainage ditch. The foundation is mostly level, but has a steep slope at its southern edge, facing the railroad bed.

The site is underlain by an Ordovician age biotite gneiss bedrock belonging to the Partridge Formation (Bedrock Map of Massachusetts, 1983; E-an Zen, et. al.) Confirmation, however, was not obtained during drilling, nor were there any outcrops noted. Based on the TBA field investigation, the soils in the upper 10 to15 feet consist of approximately 5 to 10 feet of fill or disturbed soils overlying fine to medium sand, silt, and little to trace amounts of gravel. Some stratification was noted in the south and southeast areas of the site (ME-1 and ME-2), while on the west and north sides of the site (ME-3 and ME-4), the soils were finer and contained more clay. In particular, ME-3 (located on the north side of Mill Street, adjacent to the underground storage tank) had a nearly 4 foot interval of clay. The Lycott soil boring/monitoring well MW-5, located approximately 100 feet northwest of ME-3, however, indicated no presence of clay. Geologically, the mill lies on a flood plain terrace of the Quaboag River, which is underlain by Quaternary glacial deposits of sand and gravel and possibly till. Based on borings completed by M&E and Lycott, overburden is greater than 25 feet thick.

The water table across the site tends to be deeper to the north and west (2.8 to 8.4 feet below grade) and shallower to the south and east (0.5 to 1.6 feet below grade). Water levels obtained from the monitoring wells, in combination with the topography of the land, indicate that groundwater flow is to the south-southeast towards the Quaboag River. This flow direction is consistent with the findings in the Lycott (1991) investigation of the site.

4.0 ANALYTICAL DATA EVALUATION

The field and analytical data from the site investigation conducted by M&E are presented and discussed by media in this section. The analyses conducted on each sample are summarized in Table 3-1. Analytical results for test pit soils are presented in Table 4-1, while surface and subsurface soil data from soil borings are summarized in Table 4-2. Analytical results for groundwater are summarized in Table 4-3. The tables present detected data by analytical fraction. For each fraction, an analyte is presented if it was detected in at least one sample for that media.

On each table, the Massachusetts Contingency Plan (MCP) reportable concentrations applicable to the site are presented for comparison to detected concentrations. This information is provided to evaluate whether a release of oil and/or hazardous material has occurred at the site that requires MADEP notification (MCP 40.03000) based on the reporting category that best characterizes the use of the site. MADEP background concentrations for natural soils, and for fill soils containing coal ash or wood ash, are also presented for comparative purposes (MADEP, May 2002 technical update). For test pit soils, results from TCLP metals extraction and analysis are compared to the TCLP regulatory levels (310 CMR 30.125B). A waste material that exceeds TCLP regulatory levels is classified as a hazardous waste due to the toxicity characteristic, and it must be managed in accordance with the Massachusetts Hazardous Waste Regulations (310 CMR 30.000).

A reporting category of RCGW-1 currently applies to all groundwater beneath the site, since part of the site is located within or immediately adjacent to an Interim Wellhead Protection Area. A reporting category of RCS-1 currently applies to the site soil, because there are residences within 500 feet of the site. Reporting categories may change based on changes in site use or surrounding site use and conditions. The MADEP Site Scoring Map is presented in Appendix B.

4.1 Former Building Footprint

Six soil samples, representing depths from the ground surface to nine feet below ground surface, were collected from four test pits excavated in the building footprint. No volatile petroleum hydrocarbons (VPH) fractions or target compounds were detected (Table 4-1). Low levels of some EPH fractions and PCBs were detected, but the concentrations did not approach reportable concentrations. The PCBs detected are likely to be remnants from equipment located within the building that burned in the August 2000 fire. A small transformer-like device was noted in one test pit (see Appendix C - Test Pit Logs). The levels of PCBs are an order of magnitude below the reportable concentration. The VPH, EPH, and PCB results do not indicate that a release of petroleum or PCBs has occurred in this area. If releases had occurred previously, the intensity of the building fire, which was well-documented in newspaper articles, has likely destroyed any oils that may have been present within the building. Newspaper articles about the fire mention that the oil-soaked wood floors contributed to the intensity and rapid spread of the fire. Partially burned timbers were also uncovered in the test pits (see photos in Appendix C).

Low levels of PAHs were detected, consistent with natural soil background concentrations. Concentrations of benze(b)fluoranthene, dibenz(a,h)anthracene, and indeno(1,2,3-cd)pyrene exceeded RCS-1 values in some samples. However, the detected concentrations of PAHs are below the recently-issued MADEP background levels for natural soils. It was anticipated that PAHs would be detected in the test pit soils, due to the observed presence of ash and burned wood, mixed in with the sandy loam soils used to backfill the basement void (cellar hole) left from the building fire. The ash is most likely wood ash from the fire (the mill building was a wood structure), although some coal ash and oil ash may also be present from the historical use of coal and oil in the mill boiler.

With respect to metals, the test pit soils exhibit elevated concentrations of barium, copper, and lead in particular. Concentrations of these three metals exceed reportable concentrations in one or more samples. As with the PAHs, one source is believed to be wood ash, although the levels detected are significantly higher than MADEP background values for soil containing coal ash or wood ash. It is not known what materials were in use within the building immediately prior to the fire, but the building was leased to multiple tenants with various small businesses, and several tenants used the building for storage. TCLP extraction and analysis of several samples showed exceedances of the TCLP regulatory level for lead. Hence, in addition to being a reportable condition under the MCP, the test pit soils would be classified as hazardous waste for disposal purposes, due to the lead toxicity characteristic (EPA Hazardous Waste Number D008). The exceedance of TCLP regulatory levels also indicates that a release of hazardous materials (i.e., soil containing lead) has occurred which is subject to MCP response actions. Because the building was wood and was an old structure used for commercial purposes, it is probable that building surfaces were coated with lead-based paint. The small businesses that operated within the building may also have used lead; for example, one small business mentioned was a welding business that repaired old model cars, and another applied coatings to ceramics and glass. Due to exceedances of reportable concentrations and classification as a hazardous material and potentially a hazardous waste, remediation of these soils in accordance with the MCP and the MA Hazardous Waste Regulations may be required.

4.2 Surface and Subsurface Soil from Soil Borings

Surface and/or subsurface soil samples were collected from four soil borings located to investigate the potential for releases from the UST, and to investigate areas formerly identified by Lycott (1991) as possible petroleum release areas. One boring/well, ME-1, was located within the former building footprint, while the other borings were outside the footprint (Figure 1).

No VPH fractions, target VPH compounds, or target PAHs were detected in surface or subsurface soils. Low levels of the C19-C36 aliphatic fraction were detected in surface soil samples from ME-1 and ME-4, but no other EPH fractions were detected (Table 4-2). No detections were reported in any of the subsurface soil samples. The evidence of a petroleum release in soils suspected by Lycott (1991) may have since attenuated or may have been removed by on-site activities; for example, the installation of the new septic system to the west of the Spencer Plating building. This particular area was not sampled to avoid disturbing the

septic system. Also, due to safety concerns, borings and wells were not installed within 50 feet of the railroad tracks.

Concentrations of metals in soil samples were consistent with background levels for natural soils, with the exception of the surface soil sample from ME-1. This boring was located within the building footprint, near where Lycott noted that drums were stored. The soils at this location may have been been impacted by the fire, and were logged as "fill/disturbed" to a depth of six feet below ground surface. Concentrations of beryllium and copper from this sample exceed the reportable concentrations, as well as the MADEP background levels for natural soils and for soils containing coal ash and wood ash. Copper is particularly elevated relative to other metals in this sample. A similarly high concentration of copper was detected in the deep soil sample from Test Pit 2 (4 to 7 feet), but this result was not comparable to its field duplicate, as discussed in Section 3.5. Copper from wire, pipes or small machinery parts are possible sources of copper within the building footprint. Wire is known to have been stored in the building at one time. In any case, soils in the vicinity of ME-1 may require remediation due to elevated levels of other metals in addition to copper, and the exceedance of the TCLP regulatory level for lead (see Section 4.1).

4.3 Groundwater

Groundwater samples were collected from four temporary monitoring wells (ME-1, ME-2, ME-3, and ME-4) installed at the site, as well as from an existing well, believed to be Lycott well MW-5. The sample from MW-5 was analyzed for metals only, because Lycott detected cadmium in excess of the reportable concentration in a sample from this well. Water levels obtained from the monitoring wells, in combination with the topography of the land, indicate that groundwater flow is to the south-southeast. This flow direction is consistent with the findings in the Lycott (1991) investigation of the site.

No VPH fractions, VPH target compounds, EPH fractions, or target PAHs were detected in the groundwater samples (Table 4-3). Very low levels of acetone and MTBE were detected in some samples, but the levels are not high enough to be suggestive of a release from the on-site UST. A release from the on-site UST, if present, would be expected to be evidenced at well ME-2 in particular, which is located downgradient of the UST and transmission pipe. The UST formerly contained No. 2 oil and possibly waste oil. A significant release of No. 2 oil would be expected to impact groundwater with VPH and EPH fractions, but these were not detected in any groundwater samples. The detections of TPH in water reported by Lycott (1991) may have since attenuated over the 11 years that have elapsed. Also, the old TPH analytical method, EPA Method 418.1, is known to experience "false positives" from materials other than petroleum hydrocarbons. In any case, the TBA data do not indicate an impact to site groundwater from petroleum.

Similarly, the total metals data for site groundwater do not suggest any impacts. Cadmium was not detected in any of the samples, including the sample from Lycott well MW-5. The detection reported by Lycott may have been due to suspended particulate material in the sample. The 2002 sampling event used the EPA low-flow method to collect the samples, a

method that minimizes sample turbidity as much as possible. Of the metals that were elevated in soil samples (barium, copper, and lead), only barium was detected in the groundwater, and the concentrations were well below the reportable concentration.

5.0 CONCLUSIONS

This section presents a summary of site data and information from the TBA investigation conducted at the Mill Street site. The conclusions presented are based on the findings of this investigation, including analytical data results.

5.1 Underground Storage Tank

No evidence was uncovered during the TBA suggesting that the UST had leaked. However, the number of borings conducted were few, and the possibility of a leak from the tank or the underground transmission line that is located beneath Mill Street cannot be completely ruled out. When the UST and transmission line are removed, observations should be made to determine whether a release may have occurred, and appropriate action taken if there has been a release. The UST was located using geophysical techniques and the location was marked in permanent paint, to facilitate the planned future removal of the tank.

5.2 Former Building Footprint

The primary contaminants detected in the soil, rubble, and ash that fill the hole left from the mill building demolition are lead, copper, and PAHs. Lead is of particular concern because it not only exceeds the MCP reportable concentration for S-1 category soils, but it leaches from the soils at levels which cause the TCLP regulatory level to be exceeded. For this reason, some of the material that fills the former building footprint is classified for disposal as a hazardous waste due to toxicity from lead (EPA hazardous waste number D008). Residues from the fire are the most likely source of the leachable lead, other metals, and PAHs that were detected. The levels of PCBs that were detected are very low and should not affect the choice of remedial options for the soil and rubble.

5.3 Site-wide Soils and Groundwater

In soil borings and wells placed outside the building footprint, neither soil nor groundwater contamination was encountered at levels that would suggest an on-site release of oil or hazardous materials. No evidence was encountered to suggest that the on-site UST had leaked. Past work by Lycott (1991) indicated the possibility of a petroleum release, and also showed elevated levels of cadmium in groundwater from a monitoring well, but these results were not confirmed by the TBA investigation. It is possible that the petroleum release suggested by the Lycott data may have since attenuated; may have been partially consumed by the building fire; may have been disturbed by construction of the new septic system installed to the west of the Spencer Plating building; or may have been due to "false positives" as previously described.

6.0 RECOMMENDATIONS

This section presents preliminary recommendations for the site based on the findings of this TBA. These recommendations are presented to address the site based on current conditions and information reviewed to date, and the recommendations may be modified as new or different conditions are discovered. Approaches to site compliance other than those described below may be implemented as determined by a licensed site professional (LSP) and/or the MADEP in accordance with the MCP.

6.1 UST Removal

It is recommended that the UST be removed in accordance with the Massachusetts Fire Prevention Regulations (527 CMR 9.00) and any local fire prevention rules. If a release is discovered upon UST removal, it will need to be managed in accordance with the MCP. A planning level cost estimate for UST removal and disposal is $8,500, assuming that the UST is empty and that no release from the UST or the transmission line is discovered. It is recommended that the UST removal be conducted before a tier classification (see Section 6.3) is prepared and submitted, so that the outcome of the removal can be taken into consideration in the tier classification and Phase I report. As discussed below, the former building footprint will require remediation, but it may be performed on a separate time line from the UST removal. The remainder of this section is based on the assumption that significant contamination will not be encountered when the UST is removed.

6.2 Existing RTN 2-10354 and Notification to MADEP

Laboratory results from the TBA analysis of soil/debris samples from the building footprint indicate that reportable concentrations are exceeded for lead, copper and several PAHs. The existence of these exceedances is a condition which must be reported to MADEP by the property owner within 120 days of obtaining knowledge of the condition. The town of Brookfield is not required to notify MADEP at this time, because the town is not currently an owner or operator of the property.

This newly discovered reportable condition requires notification to MADEP even though there is already a release tracking number (RTN 2-10354; Section 2.4) associated with the site, because the condition discovered during the TBA investigation is not related to the condition which led MADEP to first list the site (i.e., the evidence of petroleum and cadmium in groundwater as reported by Lycott in 1991). These conditions noted by Lycott do not appear to exist any longer, based on the TBA investigation. In any event, it is recommended that MADEP be notified of the reportable concentration exceedances detected during the TBA investigation. A new RTN will probably be assigned by MADEP, but the new number can be linked to the old number, and the site can be dealt with as one site. The property owner may notify on his or/her own by completing the MADEP form BWSC-103: Release Notification & Notification Retraction Form (available on the MADEP web site or from the Central Regional Office). Ultimately, however, the property owner will need to retain an LSP to conduct MCP compliance activities as discussed further below.

6.3 Tier Classification and Phase I Report

Under the MCP, tier classification is the method used to evaluate the severity of a release site and to determine what level of oversight is required. The site is currently classified by MADEP as a "Default Tier 1B" site, because none of the property owners (neither Mr. Allard, nor those following Mr. Allard) undertook MCP activities within the time frame specified by MADEP. The site was supposed to have been tier-classified by 1996, but no MCP submittals have been made, according to MADEP files. Sites that miss the tier classification deadline automatically default to Tier 1B status. To return to compliance, the site must be tier-classified in accordance with the MCP, Subpart E. An LSP must be retained by the property owner to conduct the tier classification. The tier classification can be based on the results of the TBA investigation, and should take into account both the original release (RTN 2-10354), the exceedances of reportable concentrations that were detected in soils from the building footprint, and results of the UST removal (if completed). The tier classification submittal can be used to link RTN 2-10354 and the new reportable condition (as noted above, another RTN will probably be assigned by MADEP for the latter condition).

Along with tier classification, a Phase I Initial Site Investigation report and a scope of work for follow-up activities to assess the release (Phase II) must also be submitted to MADEP. All three submittals must be prepared under the direction of an LSP and are due to MADEP one year after notification. The information and data presented in this report can serve as the basis for the Phase I report and tier classification.

6.4 Remedial Action and Response Action Outcome

In addition to completing the tier classification, the property owner and LSP should begin to consider the most efficient way to complete MCP compliance activities and remediate the site. This section outlines two of several possible approaches. The property owner and LSP need to determine an approach that meets regulatory requirements and the property owner's objectives.

Due to exceedances of reportable concentrations, some form of remedial action (such as capping or excavation and off-site disposal) will most likely be needed to address the material that fills the building footprint. In addition, the presence of a characteristic hazardous waste (leachable lead in soils from the building footprint) suggests that lead may have the potential to leach into groundwater. Capping, treatment, or removal of the material may be used to reduce risks from direct exposure to the material, and also reduce the potential for the leaching of lead from the material into groundwater and the Quaboag River (although no lead was detected in groundwater monitoring wells [Section 4.3]).

The hazardous material within the building footprint meets the definition of "uncontainerized hazardous waste" in the MCP. Hence, all or part of the permitting requirements in 310 CMR 30.000 (Massachusetts Hazardous Waste Regulations) may need to be followed during the remedial action, in addition to MCP requirements. MADEP would make the determination as to which requirements have to be followed, after being notified in writing of the proposed

remedial activity. The notification may be made in the form of a Release Abatement Measure (RAM) plan or Phase III Remedial Action Plan (RAP) prepared by an LSP. The requirements for transport and disposal of hazardous waste in 310 CMR 30.000 (e.g., use of hazardous waste manifests to transport the material; disposal at a RCRA facility) would also apply, if the material is moved off site without prior treatment to render it non-hazardous.

Some possible remedial alternatives include:

1) excavation and off-site disposal as a hazardous waste (i.e., at a RCRA Treatment, Storage, and Disposal Facility);
2) excavation and on-site treatment to render the soil non-hazardous, followed by off-site disposal or use of the stabilized material as backfill;
3) in-situ stabilization of the soils to render the lead non-leachable; or
4) capping of the area to limit direct exposure and leaching potential.

Other alternatives may also be available and worthy of consideration. In-situ stabilization (alternative 3) is not likely to be feasible, because of the large amount of debris (wire, small machinery, timbers, and concrete) mixed with the contaminated soils, that would make it difficult to apply the stabilization agents in place. The first, second, and fourth options are technically feasible, and the selection between the three would most likely be determined on the basis of technical feasibility and degree of protectiveness, cost, and compatibility with future plans for the property.

For cost estimation purposes, options 2 and 4 have been evaluated. Option 2 assumes reuse of the treated material on site as backfill, since preliminary estimates indicate this may be a cost effective approach to remediation. Considerations for the reuse of treated soils as backfill include regulatory and engineering issues associated with reuse and depend on future plans for the property. Option 4, capping, is also a feasible approach, because the Town has most recently indicated that its plans for development of the property south of Mill Street are limited to possible use as a parking area. Hence, the Town could accept restrictions on site use in this portion of the property. Both option 2 and option 4 would limit the future uses of the property. Option 4 could require long-term maintenance and monitoring. A detailed evaluation of alternatives is beyond the scope of a Targeted Brownfields Assessment, but it is recommended that such an evaluation be performed by an LSP in consultation with the property owner.

Option 2-Soil Stabilization and Reuse. One possible remedial activity to reduce risks at the site is to excavate and treat the soils and replace them as backfill. This treatment option would result in a soil that does not leach lead and provides the opportunity to remove debris from the soil so it can be used as fill. It does not reduce the risk of contact to concentrations of total lead and PAHs.

If the stabilized soil is proposed to be re-used, the LSP will need to perform a risk characterization in accordance with the MCP to evaluate whether and how it can be re-used, and still attain a condition of No Significant Risk at the site. Total concentrations of some metals in the soil exceed MCP Method 1 standards for unrestricted use of the property, and the

stabilization treatment will not remove these metals from the soil; the treatment is only intended to prevent the metals from leaching into groundwater. Hence, the potential risk from direct exposure to the material would still need to be evaluated, before determining whether it can be placed back on the site, either with a building constructed on top of it, or in some other form (such as with a cover of clean fill over it). If the treated material is re-used on site, it is likely that an Activity and Use Limitation would be required to prevent the material from being re-exposed without proper precautions. Options that allow for re-use of some or all of the treated material are likely to be more cost effective, if they can be shown to be feasible and protective of human health and the environment.

The feasibility of using the stabilized soil as backfill, instead of disposing of it off site, would also depend in part on the proposed use of the site in the future. If a building is going to be constructed in the same location, the material would need to be evaluated in terms of its stability as a sub-base for construction, which depends on the building design as well as the material's characteristics. It may be possible to use some or all of the stabilized soil as backfill, in combination with a cover of clean fill, once the rubble and debris are removed. The MA Solid Waste Regulations would apply to on-site reuse, and hence the MADEP Bureau of Waste Prevention-Solid Waste Management Division would need to be consulted. A Beneficial Use Determination from MADEP may be required to allow on-site reuse. This involves preparing a permit application (Form BWP SW 13) that includes the data needed for MADEP to determine whether the stabilized soil would be an effective substitute for clean fill for the purpose of filling the former building basement, and that such use will not harm public health or the environment.

One company, Soil Solutions (Marlboro, MA), has a patented metals stabilization technology that has been used at numerous sites in Massachusetts, with costs for treatment typically in the range of $20 to $35 per ton of treated waste. It can be applied either in situ or ex situ, depending on client requirements and site conditions. Soil Solutions requires a one-quart sample of the material to be treated, so that they can determine the optimum stabilization recipe and prepare a contract and cost for stabilization of the material. The approximate cost for the treatability test alone is $1,000, which is waived upon execution of a contract. After stabilization, the soil would no longer leach lead at levels that exceed the TCLP regulatory level. At that point, the stabilized soil is no longer classified as a hazardous waste, and hence disposal becomes less costly, and reuse also may become a possibility. There are other stabilization methods that can be used, but this particular one was chosen for deriving planning level costs.

Option 2-Planning Level Cost Estimate. A planning level cost estimate for excavation of the contaminated soil, rubble and debris, separation of the soil from the rubble and debris, on-site stabilization of the soil, reuse of the stabilized soil as fill, and the disposal of rubble and debris is presented in Table 6-1. The estimate assumes that the impacted volume is approximately 7,700 cubic yards (330 feet long by 90 feet wide by 7 feet deep), and that 30 percent of that volume is rubble and debris that will not require treatment. Planning level cost estimates for project planning, engineering, oversight, and MCP submittals are also included.

In addition to re-using some or all of the stabilized material as discussed previously, another possible cost savings measure is to try to segregate soil needing treatment from soil that may not. The test pit results showed exceedances of TCLP lead limits and reportable concentrations in some but not all samples. Sequential excavation, stockpiling in small units (say 1,000 cubic yards), and analysis of stockpiles may show that some material can be used as backfill without treatment. Further investigation that includes more sampling of the material may be warranted before any excavation occurs, to evaluate whether segregation would result in significant cost savings. During this additional investigation, a sample should also be collected for shipment to stabilization technology vendors, so that the appropriate mix of reagents to stabilize the lead can be determined.

The estimate also includes preparation of an Activity and Use Limitation as described above to prevent future excavation of treated soils (which will still contain levels of lead and PAHs above reportable concentrations), without proper precautions to limit exposure to the soils.

Option 4-Capping. A second possible remedial activity to reduce risks at the site is to provide a clean soil cap over the building footprint where the debris is located and nearby contaminated areas associated with the building. An MCP Notice of Activity and Use Limitation would be placed on the Deed to the property to further reduce risk by limiting human activities which would breach the cap or expose underlying soils.

Placement of a soil cap would be designed to provide drainage and vegetation to reduce the potential for rainfall to infiltrate the cap; however, it will not prevent infiltration or groundwater flow through the debris. For this option therefore, it is assumed that either a) it can be demonstrated that lead will not leach from the debris under a range of normal rainfalls and environmental conditions, or b) that rainfall infiltration and groundwater flow through the debris can be minimized by a combination of surface grading and vegetation, as well as subsurface drains to divert rainfall and groundwater from the area. An impermeable cap liner with a venting system would prevent rainfall infiltration but not groundwater flow through the debris. A liner is not proposed at this time because if there is carbon waste in the debris (wood, paper, or refuse), it could create potential methane gas buildup and anaerobic conditions within the debris that could enhance leaching of lead. In addition, it would require more maintenance, and the cost of future repairs to the cap would be higher than for a clean soil cap.

Since the debris would not be removed, but covered with a clean soil cap, the LSP would need to perform a risk characterization in accordance with the MCP to evaluate whether the cap is protective and to evaluate the types of Activity and Use Limitations that are needed to prevent human and environmental exposure. In addition, continuing ongoing monitoring of groundwater downgradient of the debris may be necessary to demonstrate that the lead is not leaching out of the soil.

Option 4-Planning Level Cost Estimate. A planning level cost estimate for removal of the oil tank, capping of the contaminated debris and soil within the building footprint, and performing annual groundwater monitoring is presented in Table 6-2. The estimate assumes that the area

to be capped is approximately 330 feet long by 90 feet wide and that the cap will be constructed of 2 ½ feet of clean fill topped by ½ foot of loam, and that a grass cover will be established. Planning level cost estimates for project planning, engineering, oversight, and MCP submittals are also included. It is assumed that once the grass is established, the Town could perform grass maintenance such as mowing, watering, and reseeding of bare spots, at no additional cost. Hence, no costs for cap maintenance are included in Table 6-2.

As noted above, an engineered landfill cap with an impermeable barrier liner is not proposed at this time. Were it deemed to be required, additional costs would be necessary for placing a foundation below the liner (either with or without vents as needed) and installing the liner and a drainage layer.

The estimate also includes ongoing groundwater monitoring and preparation of an Activity and Use Limitation as described above to prevent damage to the cap and limit future excavation of contaminated soil and debris, without proper precautions to limit exposure.

For either option, it is considered unlikely that remediation in other areas of the site will be needed, because the TBA investigation did not uncover evidence of a release in other site areas. The planning level cost estimates assume that a Response Action Outcome can be achieved following remediation of the building footprint area and removal of the UST. s

Recommended Assessment Prior to Remedy Selection. As noted above, the feasibility and design of Option 4 may depend on determining the leachability of lead in the debris and soil located in the building footprint. It is recommended that further assessment actions prior to remedy selection at a minimum include: 1) testing of representative samples by the Synthetic Precipitation Leaching Procedure (SPLP) to determine if lead will leach under natural precipitation conditions, 2) hydrologic evaluation to determine the likely dilution factor in groundwater of any leachate generated, and 3) an evaluation of whether groundwater flow through the debris occurs, either on a permanent or seasonal basis.

6.5 Phase II, Phase III, and Phase IV Submittals

The MCP requires that a Phase II Comprehensive Site Assessment and Phase III Remedial Action Plan be submitted to MADEP within two years of tier classification If a Response Action Outcome is not achieved by that deadline. The LSP would need to prepare the Phase II and Phase III submittals. Additional investigation may be recommended by the LSP to support the Phase II and III submittals. The Phase II Comprehensive Site Assessment would determine the extent of contamination and subsequent risk to human health and environment. The Phase III Remedial Action Plan would evaluate the remedial alternatives in considerable detail, and would then be followed by a Phase IV Remedy Implementation Plan that would define the details (plans and specifications) for the selected remedial alternative.

It is more cost effective, typically, to prepare a RAM Plan and conduct the remedial action promptly than to develop Phase II, III and IV documents. However, the remedial action to be conducted is fairly complex, and the additional time involved in the latter process may be

needed to select the best remedial alternative for the site, based on its proposed future use and cost considerations. In addition, for option 4-clean soil cap, the MCP Response Action Performance Standards will require that a Phase III-type detailed evaluation of alternatives be performed before capping can be considered a permanent solution, even if a RAM is performed. The current or future property owner and LSP will need to decide on the appropriate course of action.

6.6 Solid Waste Regulations

Because the site involves demolition and in-place disposal of demolition debris, it is subject to MADEP Bureau of Waste Prevention Regulations found at 310 CMR 19.000-Solid Waste Regulations. The demolition debris falls under the definitions of "Construction and Demolition Waste" and "Solid Waste". The regulations prohibit uncontrolled dumping of solid waste. Since the building was demolished and the debris was disposed of on-site without complying with the Solid Waste Site Assignment regulations, the site may meet the definition of an illegal dumping ground and as such may constitute a violation of MADEP solid waste regulations, independent of any issues related to the Massachusetts Contingency Plan.

Based on a conversation with MADEP staff, owning or operating an illegal dumping ground could subject the owner to fines of over $25,000. The buyer of the property could be fined even if it did not cause the situation. In subsequent calls between MADEP Central Region and the Town of Brookfield staff, MADEP has indicated flexibility in working with the Town to resolve these issues.

In general, compliance with solid waste regulations may require that all debris be removed, or that an engineered landfill cap be constructed over the debris. At a minimum, it must be shown that the site poses no risk, similar to the requirements of the MCP. Coordination with MADEP Bureau of Waste Prevention will be required to determine whether compliancewith the MCP will satisfy MADEP Solid Waste Rules.

It should be noted that while MCP activities are carried out under the direction of an LSP with limited involvement by the state, solid waste activities typically require direct involvement and approval of MADEP solid waste staff.

6.7 Limitations

No warranty, whether expressed or implied, is given with respect to this report or any opinions herein. It is expressly understood that this report and opinions expressed herein are based upon site conditions reported to M&E, observed by M&E, and as they existed only at the time this targeted Brownfields assessment was conducted. Without limiting the foregoing, this report, any opinions or conclusions stated herein, and its attachments are subject to the complete General Statement of Limitations and Conditions provided in Appendix G, which are incorporated by reference into, and are an integral part of, this report submittal. This report has been prepared on behalf of, and for the exclusive use of, the U.S. Environmental Protection Agency. Any use of or reliance on M&E's report by a third party, even with M&E's consent,

shall be at such party's own risk.

7.0 REFERENCES

U.S. EPA, 1996. *Region I, EPA-New England Data Validation Functional Guidelines for Evaluating Environmental Analyses.* December 1996.

Environmental Data Resources (EDR). 2001. *The EDR Radius Map with GeoCheck - 54-67 Mill Street, 66 Mill Street, Brookfield, MA 01506.* Prepared for Metcalf and Eddy. October 26, 2001.

Lycott Environmental Research, Inc. (Lycott). 1991. *Phase I Limited Site Investigation, Brookfield Mill, 112-114 Mill Street, Brookfield, MA.* August 1991.

Metcalf & Eddy, Inc. (M&E). 2002a. *Field Task Work Plan for Mill Street Property, Brookfield, Massachusetts – Targeted Brownfields Assessments.* Prepared for the U.S. Environmental Protection Agency. April 2002.

Metcalf & Eddy, Inc. (M&E). 2002b. *Background Summary Memorandum for Mill Street, Brookfield, Massachusetts – Targeted Brownfields Assessments.* Prepared for the U.S. Environmental Protection Agency. January 2002.

FIGURES

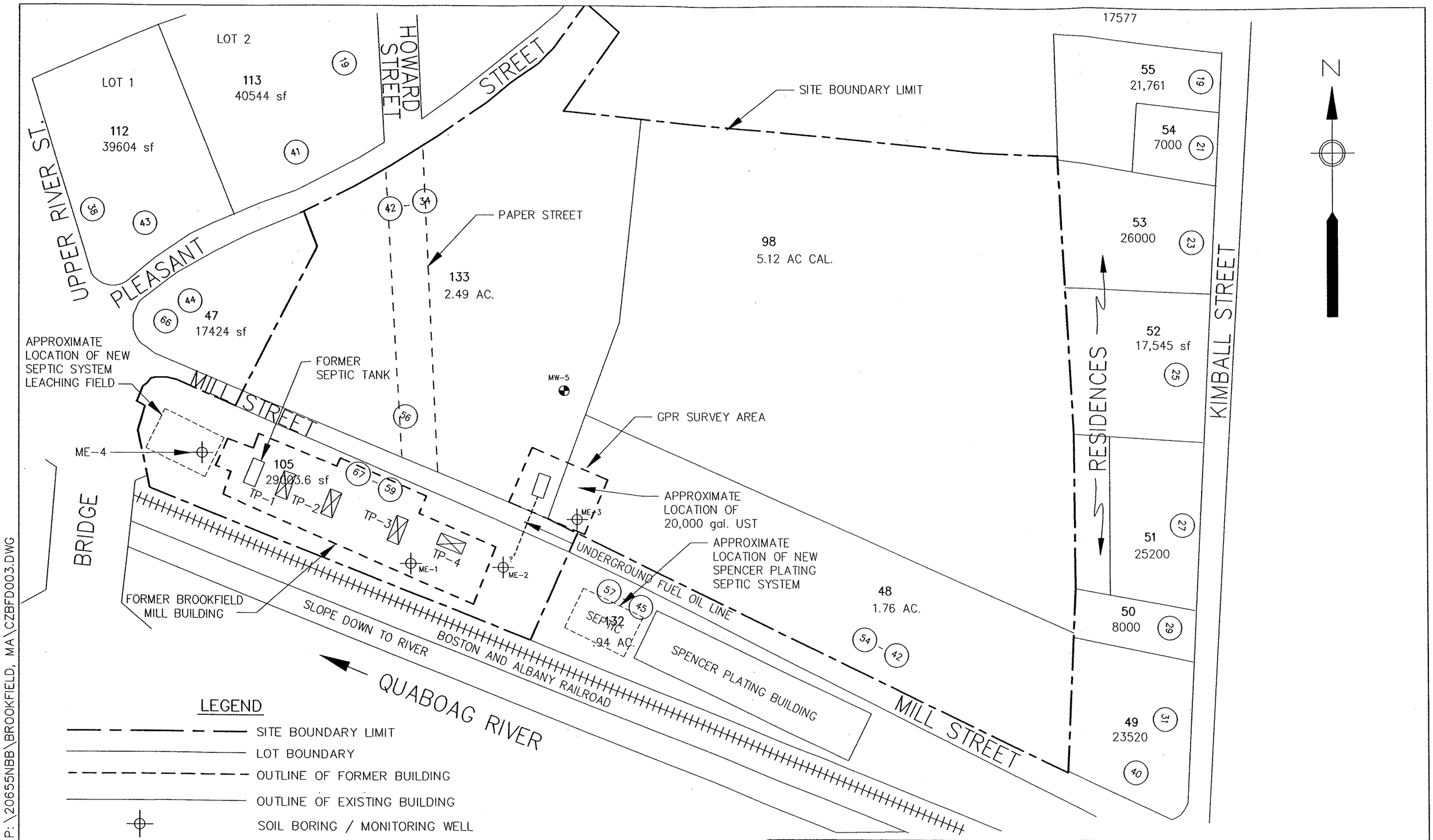

Metcalf & Eddy

FIGURE 1 – SITE INVESTIGATION PLAN
TARGETED BROWNFIELDS SITE ASSESSMENT
64 AND 67 MILL STREET
BROOKFIELD, MASSACHUSETTS

SCALE: 1" = 100'	12/20/2001	W. BALETSA	CZBFD003

P:\20655NBB\BROOKFIELD, MA\CZBFD003.DWG

ANSI B – 11-20-01

TABLES

Table 3-1.
Summary of Sampling Locations and Analyses

Sample ID		Parameters*					
		VOC	VPH*	EPH	PCBs	Total Metals	TCLP Metals
SURFACE SOIL FROM BORINGS:							
ME-1A	(0 to 4 ft bgs)		X	X		X	
ME-2A	(approx. 3 ft bgs)		X				
ME-4A	(0 to 4 ft bgs)		X	X		X	
SUBSURFACE SOIL FROM BORINGS:							
ME-1B	(4 to 12 ft bgs)		X	X		X	
ME-2B	(4 to 12 ft bgs)			X		X	
ME-3B	(4 to 12 ft bgs)		X	X		X	
ME-4B	(4 to 14 ft bgs)		X	X		X	
TEST PITS:							
TP-1-A	(0 to 4 ft bgs)		X	X	X	X	X
TP-2-A	(0 to 4 ft bgs)		X	X	X	X	X
TP-2-B	(4 to 7 ft bgs)		X	X	X	X	X
KTP-2-B[1]	(4 to 7 ft bgs)		X	X	X	X	X
TP-3-A	(0 to 4 ft bgs)		X	X	X	X	X
TP-3-B	(4 to 9 ft bgs)		X	X	X	X	X
TP-4-B	(0 to 7.5 ft bgs)		X	X	X	X	X
GROUNDWATER:							
ME-1	screened 2-12 ft bgs	X	X	X		X	
ME-2	screened 2-12 ft bgs	X	X	X		X	
KME-2[1]		X	X	X		X	
ME-3	screened 4-14 ft bgs	X	X	X		X	
ME-4	screened 5-15 ft bgs	X	X	X		X	
MW-5	Lycott well, estimated screened interval 5-25 ft bgs					X	

NOTES:
VOC - Volatile Organic Compounds
VPH - Volatile Petroleum Hydrocarbons
EPH - Extractable Total Petroleum Hydrocarbons
PCBs - Polychlorinated Biphenyls
Total Metals - EPA Target Analyte List Metals
TCLP Metals - TCLP extraction, with analysis of extract for the RCRA 8 metals

[1] Sample I.D.s beginning with "K" represent field duplicate samples of the sample location that follows
* Samples for VPH analysis were grab samples from within the depth interval stated.
Other analyses are composite samples of soils over the stated depth interval.

Table 4-1. Summary Of Analytical Data -- Soil From Test Pits
TBA Investigation -- Mill Street Property -- June 2002

LOCATION NAME	TP-1-A	TP-2-A	TP-2-B	KTP-2-B	TP-3-A	TP-3-B	TP-4-B	MCP Reportable Concentrations **	DEP Background for Natural Soils **	DEP Background for Soil Containing Coal Ash or Wood Ash **
APPROXIMATE SAMPLE DEPTH (ft bgs)	0-4	0-4	4-7	0-4	0-4	4-9	0-7.5			
M&E SAMPLE ID	TP-1-A	TP-2-A	TP-2-B	KTP-2-B	TP-3-A	TP-3-B	TP-4-B			
DATE SAMPLED	6/10/02	6/10/02	6/10/02	6/10/02	6/10/02	6/10/02	6/10/02			
COMMENTS/VPH SAMPLE DEPTH	VPH, 2-4 ft	VPH, 3-3.5 ft	VPH, 6.5-7	FD	VPH, 3-3.5	VPH, 7 ft	VPH, 5.5 ft	RCS-1	**	**
VOLATILE PETROLEUM HYDROCARBONS - MADEP - VPH-98-1 (ug/kg)										
C_9-C_{12} Aliphatics (1)	5,500 U	6,300 U	6,500 UJ	6,800 UJ	4,600 U	6,000 U	12,000 J	1,000,000	--	--
EXTRACTABLE PETROLEUM HYDROCARBONS - MADEP-EPH-98-1 (ug/kg)										
C_9-C_{18} Aliphatics (1)	3,300 U	4,200	5,500	3,700 U	3,400 U	3,400 U	53,000	1,000,000	--	--
C_{19}-C_{36} Aliphatics (1)	47,000	98,000	190,000	150,000	86,000	24,000	530,000	2,500,000	--	--
C_{11}-C_{22} Aromatics (1)	9,200 U	25,000	38,000	28,000	22,000	12,000	85,000	200,000	--	--
Acenaphthene	540 U	570 U	630 U	620 U	560 U	570 U	770 U	20,000	500	2,000
Acenaphthylene	540 U	570 U	630 U	620 U	560 U	570 U	770 U	100,000	500	1,000
Anthracene	540 U	570 U	630 U	620 U	560 U	570 U	770 U	1,000,000	1,000	4,000
Benzo(a)anthracene	540 U	570 U	680	620 U	560 U	570 U	770 U	700	2,000	9,000
Benzo(a)pyrene	540 U	570 U	690	620 U	560 U	570 U	770 U	700	2,000	7,000
Benzo(b)fluoranthene	540 U	**920**	**1,300**	**1,200**	**1,100**	**960**	770 U	700	2,000	8,000
Benzo(g,h,i)perylene	540 U	570 U	630 U	620 U	560 U	570 U	770 U	1,000,000	1,000	3,000
Benzo(k)fluoranthene	540 UJ	570 UJ	630 UJ	620 UJ	560 UJ	570 UJ	770 UJ	7,000	1,000	4,000
Chrysene	540 U	570 U	630 U	620 U	560 U	570 U	770 U	7,000	2,000	7,000
Dibenzo(a,h)anthracene	540 U	600	**860**	**780**	**710**	570 U	770 U	700	500	1,000
Fluoranthene	540 U	590	1,600	1,200	1,100	570 U	770 U	1,000,000	4,000	10,000
Fluorene	540 U	570 U	630 U	620 U	560 U	570 U	770 U	400,000	1,000	2,000
Indeno(1,2,3-cd)pyrene	540 U	600	**860**	**780**	**710**	570 U	770 U	700	1,000	3,000
Naphthalene	540 U	570 U	630 U	620 U	560 U	570 U	770 U	4,000	500	1,000
Phenanthrene	540 U	570 U	1,700	1,300	1,100	570 U	770 U	100,000	3,000	20,000
Pyrene	540 U	650	1,500	1,200	1,100	570 U	770 U	700,000	4,000	20,000
2-Methylnaphthalene	540 U	570 U	630 U	620 U	560 U	570 U	850	4,000	500	1,000
PCBs - SW-846, Method 8082 (µg/kg)										
Aroclor-1260	55 U	140	150	120	110	58 U	78 U	2,000	--	--
TCLP Metals (ug/L, in TCLP extract of soil)								**TCLP Regulatory Level (ug/L)**		
Arsenic	0.55 U	2.0 J	1.4 J	1.3 J	2.4 J	1.2 J	2.0 J	5,000	--	--
Barium	1,500	2,100	3,900	3,700	950	1,600	210	100,000	--	--
Cadmium	45 J	22 J	18 J	15 J	8.6 J	2.8 J	53 J	1,000	--	--
Chromium	13 UJ	21 UJ	32 U	28 U	17 UJ	21 UJ	43 U	5,000	--	--
Lead	2,300	940	**7,800**	**6,200**	860	1,300	**18,000**	5,000	--	--
Mercury	0.27 U	0.27 U	0.27 U	0.27 U	0.27 U	0.27 U	0.27 U	200	--	--
Selenium	6.0 U	6.0 U	6.0 U	6.0 U	6.0 U	6.0 U	6.0 U	1,000	--	--
Silver	0.32 U	0.32 U	0.32 U	0.32 U	0.32 U	0.32 U	0.32 U	5,000	--	--

Table 4-1. Summary Of Analytical Data -- Soil From Test Pits
TBA Investigation -- Mill Street Property -- June 2002

LOCATION NAME	TP-1-A	TP-2-A	TP-2-B	KTP-2-B	TP-3-A	TP-3-B	TP-4-B	MCP Reportable Concentrations **	DEP Background for Natural Soils **	DEP Background for Soil Containing Coal Ash or Wood Ash **
APPROXIMATE SAMPLE DEPTH (ft bgs)	0-4	0-4	4-7	0-4	0-4	4-9	0-7.5			
M&E SAMPLE ID	TP-1-A	TP-2-A	TP-2-B	KTP-2-B	TP-3-A	TP-3-B	TP-4-B			
DATE SAMPLED	6/10/02	6/10/02	6/10/02	6/10/02	6/10/02	6/10/02	6/10/02			
COMMENTS/VPH SAMPLE DEPTH	VPH, 2-4 ft	VPH, 3-3.5 ft	VPH, 6.5-7	FD	VPH, 3-3.5	VPH, 7 ft	VPH, 5.5 ft	RCS-1	**	**
RAS INORGANICS - Total Metals (mg/Kg)										
Aluminum	10,600 J	8,900 J	26,200 J	9,450 J	9,100 J	8,090 J	10,900 J	--	10,000	10,000
Antimony	0.85 UJ	1.0 UJ	5.1 UJ	4.0 UJ	0.86 UJ	0.88 UJ	3.7 UJ	10	1	7
Arsenic	2.0	8.6	7.1	6.5	6.6	4.2	5.9	30	20	20
Barium	143	317	**3,250**	**2,350**	85.6	287	**2,230**	1,000	50	50
Beryllium	0.27 U	0.27 U	0.19 U	0.28 U	0.21 U	0.25 U	0.19 U	0.7	0.4	0.9
Cadmium	0.11 U	0.51	0.70	0.46	0.41	0.12 U	1.7	30	2	3
Calcium	2,540 J	2,650 J	6,970 J	8,760 J	2,940 J	8,730 J	22,700 J	--	--	--
Chromium	16.2 J	17.0 J	25.5 J	20.4 J	33.1 J	11.0 J	19.4 J	1,000	30	40
Cobalt	5.2	4.7	7.7 J	7.1 J	4.3	3.3	6.9 J	--	4	4
Copper	19.6 J	106 J	**6,380** J	308 J	95.6 J	41.2 J	**1,680** J	1,000	40	200
Iron	15,100	15,100	34,800	34,500	16,000	13,000	63,900	--	20,000	20,000
Lead	277 J	277 J	**546** J	**362** J	190 J	51.0 J	**1,250** J	300	100	600
Magnesium	2,850	2,240	2,540	3,960	2,070	1,490	3,480	--	5,000	5,000
Manganese	209	161	400	334	157	148	343	--	300	300
Mercury	0.06 U	0.09 J	0.12 J	0.08 U	0.11 J	0.10 J	0.09 J	20	0.3	1
Nickel	7.2 J	9.3 J	56.5 J	18.9 J	8.6 J	6.1 J	28.5 J	300	20	30
Potassium	2,740	1,790	1,470	1,270	1,440	888	1,140	--	--	--
Selenium	0.49 U	1.3	0.56 U	0.89 J	0.53 J	0.51 U	0.89 J	400	0.5	1
Silver	0.25 U	0.25 U	3.8	0.34 J	0.25 U	0.25 U	1.1	100	0.6	5
Sodium	539	645	2,630 J	1,690 J	575	554	2,900	--	--	--
Thallium	0.78 U	0.79 U	0.89 U	1.1 U	0.79 U	0.81 U	1.3 J	8	0.6	5
Vanadium	27.9	26.4	21.7	17.2	29.9	16.2	16.5	400	30	30
Zinc	82.8 J	143 J	1,690 J	788 J	104 J	171 J	1,600 J	2,500	100	300
LAB SAMPLE ID										
VPH, EPH, PCBs, TCLP Metals	TP-1-A	TP-2-A	TP-2-B	KTP-2-B	TP-3-A	TP-3-B	TP-4-B			
RAS - Total Metals	MALR30	MALR31	MALR33	MALR28	MALR29	MALR34	MALR32			

Table 4-2. Summary Of Analytical Data -- Soil From Borings
TBA Investigation -- Mill Street Property -- June 2002

LOCATION NAME	ME-1A	ME-1B	ME-2A	ME-2B	ME-3B	ME-4A	ME-4B	MCP Reportable Concentrations ** RCS-1	DEP Background for Natural Soils **	DEP Background for Soil Containing Coal Ash or Wood Ash **
APPROXIMATE SAMPLE DEPTH (ft bgs)	0-4	4-12	3	4-12	4-12	0-4	4-14			
M&E SAMPLE ID	ME-1A-0-4	ME-1B-4-12	ME-2A-3	ME-2B-4-12	ME-3B-4-12	ME-4A-0-4	ME-4B-4-14			
DATE SAMPLED	6/11/02	6/11/02	6/11/02	6/11/02	6/12/02	6/12/02	6/12/02			
COMMENTS										
VOLATILE PETROLEUM HYDROCARBONS - MADEP - VPH-98-1 (ug/kg)										
C_9-C_{12} Aliphatics (1)	5,600 U	5,900 U	6,800 U	5,800 U	6,200 U	6,000 U	6,300 U	1,000,000	--	--
EXTRACTABLE PETROLEUM HYDROCARBONS - MADEP-EPH-98-1 (ug/kg)			Not Analyzed							
C_9-C_{18} Aliphatics (1)	4,300	3,500 U		3,400 U	3,300 U	3,200 U	3,500 U	1,000,000	--	--
C_{19}-C_{36} Aliphatics (1)	65,000	4,600 U		4,500 U	4,400 U	12,000	4,700 U	2,500,000	--	--
C_{11}-C_{22} Aromatics (1)	9,400 U	9,800 U		9,600 U	9,400 U	9,200 U	10,000 U	200,000	--	--
Acenaphthene	550 U	580 U		570 U	550 U	540 U	590 U	20,000	500	2,000
Acenaphthylene	550 U	580 U		570 U	550 U	540 U	590 U	100,000	500	1,000
Anthracene	550 U	580 U		570 U	550 U	540 U	590 U	1,000,000	1,000	4,000
Benzo(a)anthracene	550 U	580 U		570 U	550 U	540 U	590 U	700	2,000	9,000
Benzo(a)pyrene	550 U	580 U		570 U	550 U	540 U	590 U	700	2,000	7,000
Benzo(b)fluoranthene	550 U	580 U		570 U	550 U	540 U	590 U	700	2,000	8,000
Benzo(g,h,i)perylene	550 U	580 U		570 U	550 U	540 U	590 U	1,000,000	1,000	3,000
Benzo(k)fluoranthene	550 UJ	580 UJ		570 UJ	550 UJ	540 UJ	590 UJ	7,000	1,000	4,000
Chrysene	550 U	580 U		570 U	550 U	540 U	590 U	7,000	2,000	7,000
Dibenzo(a,h)anthracene	550 U	580 U		570 U	550 U	540 U	590 U	700	500	1,000
Fluoranthene	550 U	580 U		570 U	550 U	540 U	590 U	1,000,000	4,000	10,000
Fluorene	550 U	580 U		570 U	550 U	540 U	590 U	400,000	1,000	2,000
Indeno(1,2,3-cd)pyrene	550 U	580 U		570 U	550 U	540 U	590 U	700	1,000	3,000
Naphthalene	550 U	580 U		570 U	550 U	540 U	590 U	4,000	500	1,000
Phenanthrene	550 U	580 U		570 U	550 U	540 U	590 U	100,000	3,000	20,000
Pyrene	550 U	580 U		570 U	550 U	540 U	590 U	700,000	4,000	20,000
2-Methylnaphthalene	550 U	580 U		570 U	550 U	540 U	590 U	4,000	500	1,000
RAS INORGANICS - Total Metals (mg/Kg)			Not Analyzed							
Aluminum	10,100 J	5,870 J		7,500 J	11,400 J	9,080 J	7,190 J	--	10,000	10,000
Antimony	2.1 UJ	0.88 UJ		0.87 UJ	0.86 UJ	0.84 UJ	0.92 UJ	10	1	7
Arsenic	6.8	1.3 J		1.7	1.4	4.0	1.4 J	30	20	20
Barium	228	42.8		69.6	72.0	43.7	49.2	1,000	50	50
Beryllium	1.4	0.25 U		0.18 U	0.12 UJ	0.21 U	0.50	0.7	0.4	0.9
Cadmium	0.11 U	0.12 U		0.11 U	0.53	0.11 U	0.12 U	30	2	3
Calcium	12,700 J	1,780 J		1,410 J	650 J	442 J	442 J	--	--	--
Chromium	22.8 J	13.5 J		19.2 J	24.9 J	14.3 J	15.6 J	1,000	30	40
Cobalt	12.2 J	8.4		10.3	23.9	4.6	33.3	--	4	4
Copper	4,520 J	17.8 J		20.9 J	21.0 J	19.8 J	12.3 J	1,000	40	200
Iron	27,600	12,300		17,300	14,000	13,400	25,800	--	20,000	20,000
Lead	100 J	2.6 J		3.6 J	3.0 J	19.1 J	3.4 J	300	100	600
Magnesium	3,660	2,160		3,280	3,880	2,120	2,340	--	5,000	5,000
Manganese	209	63.8		112	103	159	284	--	300	300
Mercury	0.06 U	0.06 U		0.06 U	0.06 U	0.06 U	0.06 U	20	0.3	1
Nickel	16.5 J	14.7 J		19.3 J	51.9 J	7.1 J	13.3 J	300	20	30
Potassium	3,160	2,210		3,390	4,190	1,260	2,380	--	--	--
Selenium	0.50 U	0.63 J		0.50 U	0.50 U	0.77 J	0.53 U	400	0.5	1

Table 4-2. Summary Of Analytical Data -- Soil From Borings
TBA Investigation -- Mill Street Property -- June 2002

LOCATION NAME	ME-1A	ME-1B	ME-2A	ME-2B	ME-3B	ME-4A	ME-4B	MCP Reportable Concentrations ** RCS-1	DEP Background for Natural Soils **	DEP Background for Soil Containing Coal Ash or Wood Ash **
APPROXIMATE SAMPLE DEPTH (ft bgs)	0-4	4-12	3	4-12	4-12	0-4	4-14			
M&E SAMPLE ID	ME-1A-0-4	ME-1B-4-12	ME-2A-3	ME-2B-4-12	ME-3B-4-12	ME-4A-0-4	ME-4B-4-14			
DATE SAMPLED	6/11/02	6/11/02	6/11/02	6/11/02	6/12/02	6/12/02	6/12/02			
COMMENTS										
Silver	1.2	0.25 U		0.25 U	0.25 U	0.24 U	0.27 U	100	0.6	5
Sodium	829 J	439		543	454	483	568	--	--	--
Thallium	0.80 U	0.81 U		0.80 U	0.79 U	0.77 U	1.1 J	8	0.6	5
Vanadium	29.0	19.0		27.8	29.7	18.9	22.5	400	30	30
Zinc	224 J	24.9 J		33.7 J	58.1 J	35.2 J	33.8 J	2,500	100	300
LAB SAMPLE ID										
Volatile Organic Compounds	81142002	81142004		81142003	81142004	81142001	81142004			
VPH, EPH	ME-1A-0-4	ME-1B-4-12	ME-2A-3	ME-2B-4-12	ME-3B-4-12	ME-4A-0-4	ME-4B-4-14			
RAS - Total Metals	MALR20	MALR24		MALR25	MALR26	MALR23	MALR27			

Table 4-3. Summary Of Analytical Data -- Groundwater
Targeted Brownfields Assessment - Mill Street Property -- June 2002

LOCATION NAME	ME-1	ME-2		ME-3	ME-4	MW-5	
WELL SCREEN INTERVAL (ft bgs)	2-12	2-12		4-14	5-15	5-25***	Reportable
M&E SAMPLE ID	ME-1	ME-2	KME-2	ME-3	ME-4	ME-5	Concentrations
DATE SAMPLED	6/18/02	6/18/02	6/18/02	6/18/02	6/19/02	6/18/02	**
COMMENTS			FD			Lycott	RCGW-1
PARAMETER/ANALYTE							
VOLATILE PETROLEUM HYDROCARBONS - MADEP-VPH-98-1 (µg/l)						Not Analyzed	
None Detected (all analytes; all samples analyzed)							
VOLATILE ORGANIC COMPOUNDS - RAS (µg/l)						Not Analyzed	
Acetone	5.0 UJ	10 J	9.1 J	50 J	5.0 UJ		3,000
Methyl-t-butyl ether (MTBE)	1.1 J	0.50 UJ	0.50 UJ	0.50 UJ	0.50 UJ		50,000
EXTRACTABLE PETROLEUM HYDROCARBONS - MADEP-EPH-98-1, AND TARGET PAHs BY GC/MS-SIM (µg/l)						Not Analyzed	
None Detected (all analytes; all samples analyzed)							
METALS - RAS (µg/l)							
Aluminum	101 U	616	574	38.1 U	19.4 U	49.4 U	--
Antimony	38.2 U	38.2 U	38.2 U	38.2 U	38.2 U	38.2 U	6
Arsenic	2.1 U	2.1 U	2.1 U	2.1 U	2.1 U	2.1 U	50
Barium	64.5	84.3	85.5	20.3	20.7	9.3	2,000
Beryllium	0.33 U	0.33 U	0.33 U	0.33 U	0.33 U	0.33 U	4
Cadmium	0.22 U	0.22 U	0.22 U	0.22 U	0.22 U	0.22 U	5
Calcium	134,000	21,500	21,700	9,220	14,100 J	16,600	--
Chromium	2.2 U	2.2 U	2.2 U	2.2 U	2.2 U	2.2 U	100
Cobalt	5.6 U	5.6 U	5.6 U	5.6 U	15.5	5.6 U	5,000
Copper	4.1 U	4.1 U	4.1 U	4.1 U	4.1 U	4.1 U	10,000
Iron	107 U	619	614	416	7.0 U	98.5 U	--
Lead	1.6 U	1.6 U	1.6 U	1.6 U	1.6 U	1.6 U	20
Magnesium	17,200	3,340	3,360	2,660	4,480	4,130	--
Manganese	140	381	382	672	189	24.1	--
Mercury	0.10 U	0.10 U	0.10 U	0.10 U	0.10 U	0.10 U	1
Nickel	10.2 U	10.2 U	10.2 U	10.2 U	10.2 U	10.2 U	80
Potassium	28,800	4,630	4,350	3,720	2,320	1,950	--
Selenium	1.8 U	1.8 U	1.8 U	1.8 U	1.8 U	1.8 U	50
Silver	3.7 U	3.7 U	3.7 U	3.7 U	3.7 U	3.7 U	7
Sodium	138,000	122,000	123,000	7,230	29,100	10,900	--
Thallium	3.4 U	3.4 U	3.4 U	3.4 U	3.4 U	3.4 U	2
Vanadium	3.7 U	3.7 U	3.7 U	3.7 U	3.7 U	3.7 U	50
Zinc	3.6 U	3.6 U	6.0 J	5.6 J	3.6 U	3.6 U	900
LAB SAMPLE ID							
Volatile Petroleum Hydrocarbons	ME-1	ME-2	KME-2	ME-3	ME-4	Not Analyzed	
Volatile Organic Compounds	A0BW5	A0BW6	A0BW7	A0BW8	A0BX0	Not Analyzed	
Extractable Petroleum Hydrocarbons	ME-1	ME-2	KME-2	ME-3	ME-4	Not Analyzed	
Inorganics (Metals Only)	MA02D6	MA02D7	MA02D8	MA02D9	MA02E1	MA02E0	

Table 6-1 Planning Level Cost Estimate for Soil Stabilization and Reuse Option and MCP Compliance Activities

Tasks and subtasks	Estimated Qty	Unit	Unit cost	Subtotal cost
UNDERGROUND STORAGE TANK REMOVAL				
Excavate tank	1	ea	$2,500	$2,500
Removal and disposal of tank and adjacent piping	1	ea	$5,000	$5,000
Backfill excavation with clean fill	100	cy	$10	$1,000
Subtotal:				**$8,500**
BUILDING FOOTPRINT SOIL REMEDIATION - SOIL STABILIZATION AND REUSE OPTION				
Drill rig and operator (pre-excavation soil delineation)	1	day	$1,500	$1,500
Soil samples for delineation of excavation	20	ea	$150	$3,000
Mobilization and site preparation	1	ls	$7,500	$7,500
Excavate, segregate, and stockpile soil and debris	7,700	cy	$12	$92,400
Load, transport, and dispose debris off-site	2,310	cy	$50	$115,500
Treat soil stockpile using metals stabilization technology	5,390	cy	$25	$134,750
Confirmatory analyses of stabilized soil	10	ea	$150	$1,500
Backfill excavation with stabilized soil	5,390	cy	$5	$26,950
Backfill excavation with clean soil (balance volume removed)	2,310	cy	$12	$27,720
Subtotal:				**$410,820**
ENGINEERING, OVERSIGHT, AND MCP COMPLIANCE				
Tier classification, Phase I report, Phase II scope of work	120	hr	$75	$9,000
Release Abatement Measure (RAM) Plan	120	hr	$75	$9,000
Risk Characterization (for reuse of soil)	80	hr	$75	$6,000
Permitting (wetlands) and coordination with conservation commission	80	hr	$75	$6,000
Remediation Design Plans and Specifications (for bidding)	120	hr	$75	$9,000
Oversight of UST Removal	3	days	$600	$1,800
Oversight of Building Footprint Soil Remediation	4	weeks	$1,000	$4,000
Bill of Lading for Debris Transport/Disposal	1	ls	$1,000	$1,000
RAM Completion Report	90	hr	$75	$6,750
Filing of Activity and Use Limitation	50	hr	$75	$3,750
Response Action Outcome Statement	100	hr	$75	$7,500
Subtotal:				**$63,800**

Notes:

- UST is assumed to be empty and not to have leaked.
- Quantities are based on TBA investigation data and assumptions regarding area and depth of former building basement [estimated to be 330 feet long by 90 feet wide and 7 feet deep].
- Unit cost assumes that stabilized soil will be classified as solid waste and suitable for reuse within the excavation

Table 6-2. Planning Level Cost Estimate for Soil Cap Option and MCP Compliance Activities

Tasks and subtasks	Estimated Qty	Unit	Unit cost	Subtotal cost
UNDERGROUND STORAGE TANK REMOVAL				
Excavate tank (2 day effort likely)	1	ea	$2,500	$2,500
Removal and disposal of tank and adjacent piping	1	ea	$5,000	$5,000
Backfill excavation with clean fill	100	cy	$10	$1,000
Subtotal:				**$8,500**
BUILDING FOOTPRINT SOIL REMEDIATION: -SOIL CAP OPTION				
Drill rig and operator (pre-capping soil delineation)	1	day	$1,500	$1,500
Soil samples for delineation of capping	12	ea	$150	$1,800
Install permanent wells for future long-term monitoring (3)	1	ls	$7,500	$7,500
Install erosion controls around site	1	ls	$5,000	$5,000
Regrade site in preparation of soil cap	1	ls	$10,000	$10,000
Place soil barrier of clean fill, overlain by soil (for grass planting)	1	ls	$20,000	$20,000
Cost of fill (2.5 feet thick, 330 feet long, 90 feet wide - plus 20% for bulk)	3,000	cy	$8	$24,000
Cost of soil (6 inches thick; plus 20% for bulk)	600	cy	$16	$9,600
Fertilize, seed, and watering	1	ls	$5,000	$5,000
Subtotal:				**$84,400**
ENGINEERING, OVERSIGHT, AND MCP COMPLIANCE				
Tier classification, Phase I report, Phase II scope of work	120	hr	$75	$9,000
Phase II Site Assessment Report with Method 3 Risk Characterization	280	hr	$75	$21,000
Phase III and Phase IV plan (remedial action selection/implementation)	100	hr	$75	$7,500
Permitting (wetlands) and coordination with conservation commission	80	hr	$75	$6,000
Remediation design and specifications (for bidding)	80	hr	$75	$6,000
Site survey and development of site grading plans	50	hr	$75	$3,750
Allowance for engineering oversight of UST and cap construction	1	ls	$7,500	$7,500
Filing of Activity and Use Limitation	50	hr	$75	$3,750
Response Action Outcome Statement	75	hr	$75	$5,625
Subtotal:				**$70,125**
ANNUAL GROUNDWATER MONITORING				
Sampling of 3 monitoring wells, placed between cap and RR tracks	30	hr	$75	$2,250
Sample analysis (lead only) plus QC samples	5	ea	$50	$250
Data validation and reporting	24	hr	$75	$1,800
Subtotal: [approximate cost per year]				**$4,300**

Notes:

- UST is assumed to be empty and not to have leaked.
- Quantities are based on TBA investigation data and assumptions regarding area of former building basement [estimated to be 330 feet long by 90 feet wide and 7 feet deep].

TABLE NOTES:

1. Hydrocarbon ranges are adjusted to exclude the concentration of target and QC (surrogate) analytes.

** - Values shown for standards are in the same units as the analytical data.

*** - Well screen interval is estimated based on down hole measurements, but could not be positively identified.

MADEP Criteria

MCP Reportable Concentrations, 310 CMR 40.0000 Subpart P Massachusetts Oil and Hazardous Material List

"--" indicates no MCP Reportable Concentration available

Background Levels - MADEP Technical Updatee, May 2002. Background Levels of Polycyclic Aromatic Hydrocarbons and Metals in Soil.

TCLP Regulatory Criteria: 310 CMR 30.125B, Maximum Concentration of Contaminants for Toxicity Characteristic.

"--" indicates no MCP Reportable Concentration, Background Level, or TCLP regulatory level available/applicable.

ft bgs - feet below ground surface

B - Organics: Analyte detected in a laboratory blank. Inorganics: The analyte was detected at a concentration greater than the Instrument Detection Limit (IDL) and less than the Contract Required Detection Limit (CRDL).

FD - Indicates Field Duplicate

J - Quantitation is approximate due to limitations identified in the quality control review.

U - Analyte was not detected. Value reported is the sample-specific detection limit.

UJ - Sample-specific detection limit is approximate due to limitations identified in the quality control review.

Bold - indicates value greater than applicable MCP reportable concentration, or TCLP regulatory level (where applicable).

Lycott - Well is a pre-existing well, assumed to have been installed as part of the site assessment performed by Lycott in 1991. Well is in the same approximate location as the Lycott well denoted as MW-5.

APPENDIX A

SITE PHOTOS

PHOTOS:

(A) View looking southeast towards site of former Mill building with the Spencer Plating building in background and the B&A Railroad and Quaboag River in the top right hand corner.

(B) View looking east from Route 148 down Mill Street.

(C) View looking north towards the northern parcel (UST in the vicinity of the hydrant).

(D) Vehicle parking area in the northern parcel, looking north east towards wooded section.

(A)

(B)

(C)

(D)

APPENDIX B

MADEP SITE SCORING MAP

MA DEP - Bureau of Waste Site Cleanup

Site Scoring Map: 500 feet & 0.5 Mile Radii

SITE NAME:
64-67 Mill Street
Brookfield, MA
884455n 150367ew

Site Location

The information shown on this map is the best available at the date of printing. Please refer to the data source descriptions document.

MASS GIS
Massachusetts Geographic Information System
Massachusetts Executive Office of Environmental Affairs - 2001

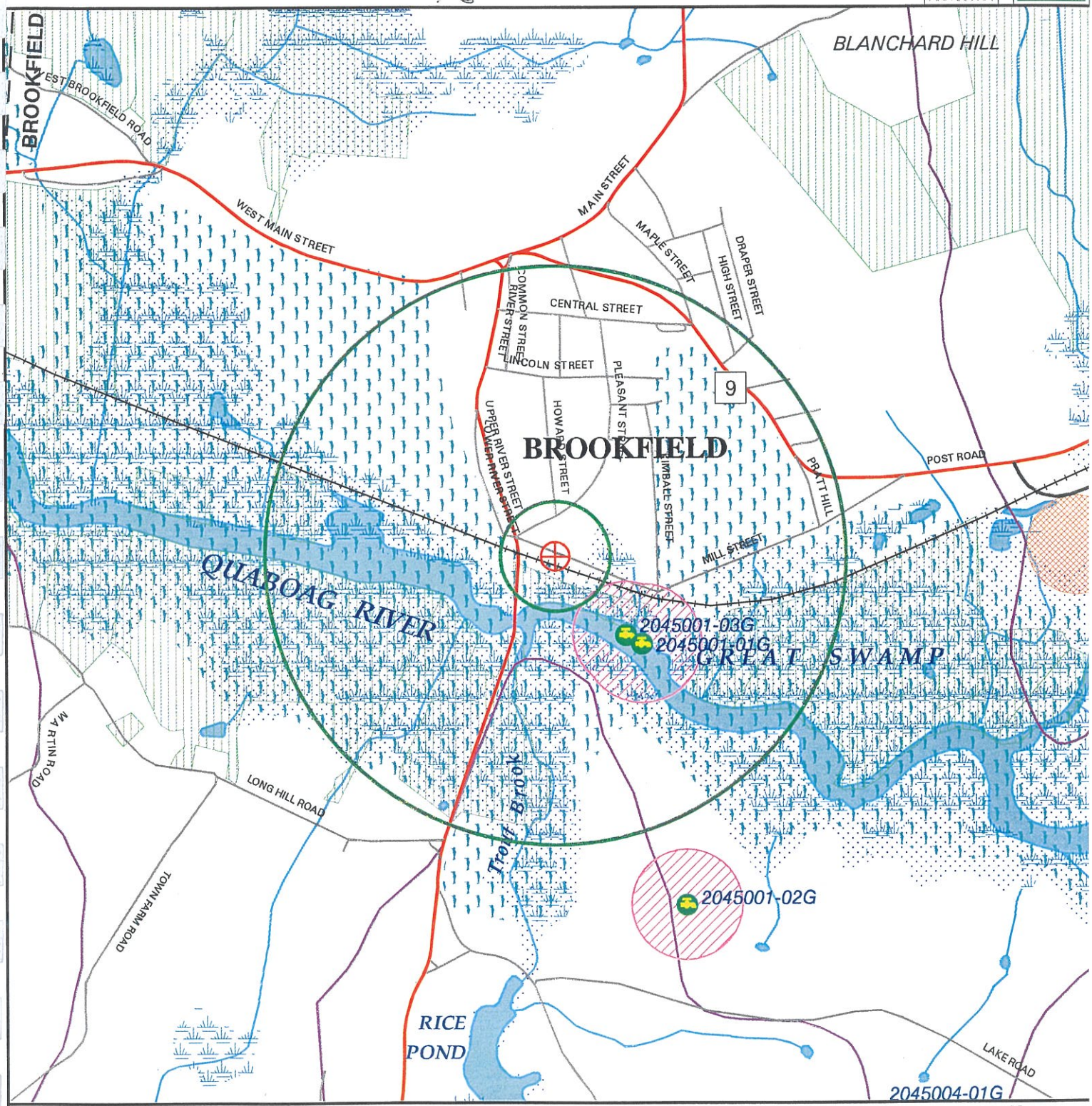

Roads: Limited Access, Divided, Major Road, Connector, Street, Track, Trail
Boundaries: Town, County, DEP Region; Train; Powerline; Pipeline; Aqueduct
Basins: Major, Sub; Streams: Perennial, Intermittent, Man Made Shore, Dams
Potentially Productive Aquifers: Medium,High Yield
Non-Potential Drinking Water Source Area: Medium,High Yield

EPA Sole Source Aquifer; FEMA 100-year floodplain
Public Water Supplies: Ground,Surface,Non Community
Approved Zone2; IWPA; Surface Water Supply Zone A
Hydrography: Water Features,Public Surface Water Supply
Wetlands: Fresh,Salt,NHESP Wetlands Habitat
Protected Open Space; ACEC
DEP Permitted Solid Waste Facilities; Certified Vernal Pools

N W E S

SCALE 1:15000

0 1/2 1 MILES
0 1/2 1 KILOMETERS

January 08, 200

APPENDIX C

GEOPHYSICAL SURVEY REPORT

Hager GeoScience Inc.

596 Main Street Woburn, MA 01801

Tel 781-935-8111 Fax 781-935-2717

May 22, 2002
File 200217

Metcalf & Eddy, Inc.
30 Harvard Mill Square
P.O. Box 4071
Wakefield, Massachusetts 01880-5371
Attention: Bill Buelow

Re: Geophysical Survey
64 Mill Street
Brookfield, Massachusetts

Dear Mr. Buelow:

This letter reports the results of a geophysical survey performed by Hager GeoScience, Inc. (HGI) for Metcalf & Eddy, Inc. (M&E) at a site in Brookfield, Massachusetts

Introduction. In May 2002, HGI was contracted by M&E to perform a geophysical survey at 64 Mill Street in Brookfield, Massachusetts. The main objective of the survey was to confirm the presence and location of a suspected underground storage tank (UST) at the site. A secondary objective was to track associated piping.

Data Acquisition. HGI personnel performed the survey on May 21, 2002. The survey area was designated by an M&E representative, who was present during the fieldwork. Data were collected with a GSSI SIR System 2000 digital ground penetrating radar (GPR) system, using a 400-MHz antenna in survey wheel mode. A description of the GPR technique and its limitations is included as Appendix A of this letter report. The GPR acquisition window was set at 80 nanoseconds (ns) to enable the recording of backscattered GPR waves from depths of approximately 13 to 16 feet. GPR data were displayed on a color monitor and simultaneously recorded on the system's hard drive. They were subsequently downloaded to a PC at the HGI office for review as necessary using GSSI's RADAN for Windows® software.

Results. The presence and location of the suspect UST were confirmed and the piping tracked. HGI personnel marked the locations of targets on the ground prior to leaving the site.

Please contact us at (781) 935-8111 if you have any questions or need additional information.

Respectfully yours,
HAGER GEOSCIENCE, INC.

Jutta L. Hager, Ph.D.
President

APPENDIX A. The Ground Penetrating Radar Technique

Description of the Method. The principle of ground penetrating radar (GPR) is the same as that of weather or police radar, except that GPR transmits electromagnetic energy into the ground, and the energy is reflected back to the surface from interfaces between materials with contrasting electrical (dielectric and conductivity) and physical properties. The greater the contrast between two materials in the subsurface, the stronger the reflection observed on the GPR record. The depth of GPR signal penetration depends on the properties of the subsurface materials and the frequency of the antenna used to collect radar data. The lower the antenna frequency used, the deeper the signal penetration, but the lower the signal resolution.

We collect GPR data using a Geophysical Survey Systems SIR System 2 and 2000 digital ground penetrating radar unit, which consists of a computer connected to a transmit/receive antenna. Radar data are collected in point, continuous, or survey wheel mode while moving the antenna across the ground. They are displayed in color on the computer monitor and simultaneously recorded on the unit's hard drive for later processing and interpretation using proprietary RADAN for Windows® software. Hard copies of the data may be printed in the field on a thermal printer.

Data Analysis and Interpretation. The horizontal scale of the GPR record shows distance along the survey traverse. In the continuous data collection mode, the horizontal scale on each GPR record is determined by the antenna speed. When a survey wheel is used, as at this site, the GPR record is automatically marked at specified intervals along the survey line. The vertical scale of the radar records is determined by the recording interval. The recording interval represents the maximum two-way travel time in which data are recorded. The conversion of two-way travel time to depth depends on the propagation velocity of the GPR signal, which is site specific. In the absence of site-specific subsurface information about stratigraphy, we estimate propagation velocities from handbook values and experience at similar sites.

The size, shape, and amplitude of GPR reflections are used to interpret GPR data. Metal objects such as USTs and utilities produce reflections with high amplitude and distinctive hyperbolic shapes in GPR records when traverses are made perpendicular to their long axes. Clay or concrete pipes and boulders may produce radar signatures of similar shape but lower amplitude. The boundaries between saturated and unsaturated materials, sand and clay, and bedrock and overburden, generally also produce strong reflections.

Limitations of the Method. GPR signal penetration is site specific, determined by the dielectric properties of local soil and fill materials. GPR signals propagate well in resistive materials such as sand and gravel; however, soils containing clay, ash- or cinder-laden fill, or fill saturated with brackish or otherwise conductive groundwater cause GPR signal attenuation and loss of target resolution (i.e., limited detection of small objects). Concrete containing rebar or mesh also inhibits signal penetration.

Interpreted depths of objects detected using GPR are based on on-site calibration, handbook values, and/or estimated GPR signal propagation velocities from similar sites. GPR velocities and depth estimates may vary if the medium of investigation or soil water content is not uniform throughout the site. (Electromagnetic waves do not travel as fast through water as air, so the distance to a reflector below the water table may appear farther than in actuality.)

Utilities are interpreted on the basis of reflectors of similar size and depth that show a linear trend, but GPR cannot unambiguously determine that all such reflectors are related. Fiberglass USTs or utilities composed of plastic or clay may be difficult to detect, as well as objects underneath reinforced concrete pads.

Changes in the speed at which the GPR antenna is moved between stations causes slight variations in distance interpolations, and hence in interpreted object positions.

The GPR antenna produces a cone-shaped signal pattern that emanates approximately 45 degrees from horizontal fore and aft of the antenna. Therefore, buried objects may be detected before the antenna is located directly over them, and GPR anomalies may appear larger than actual target dimensions.

GPR is an interpretive method, based on the subjective identification of reflection patterns that may not uniquely identify a subsurface target. Borings, test pits, or site utility plans must verify the results.

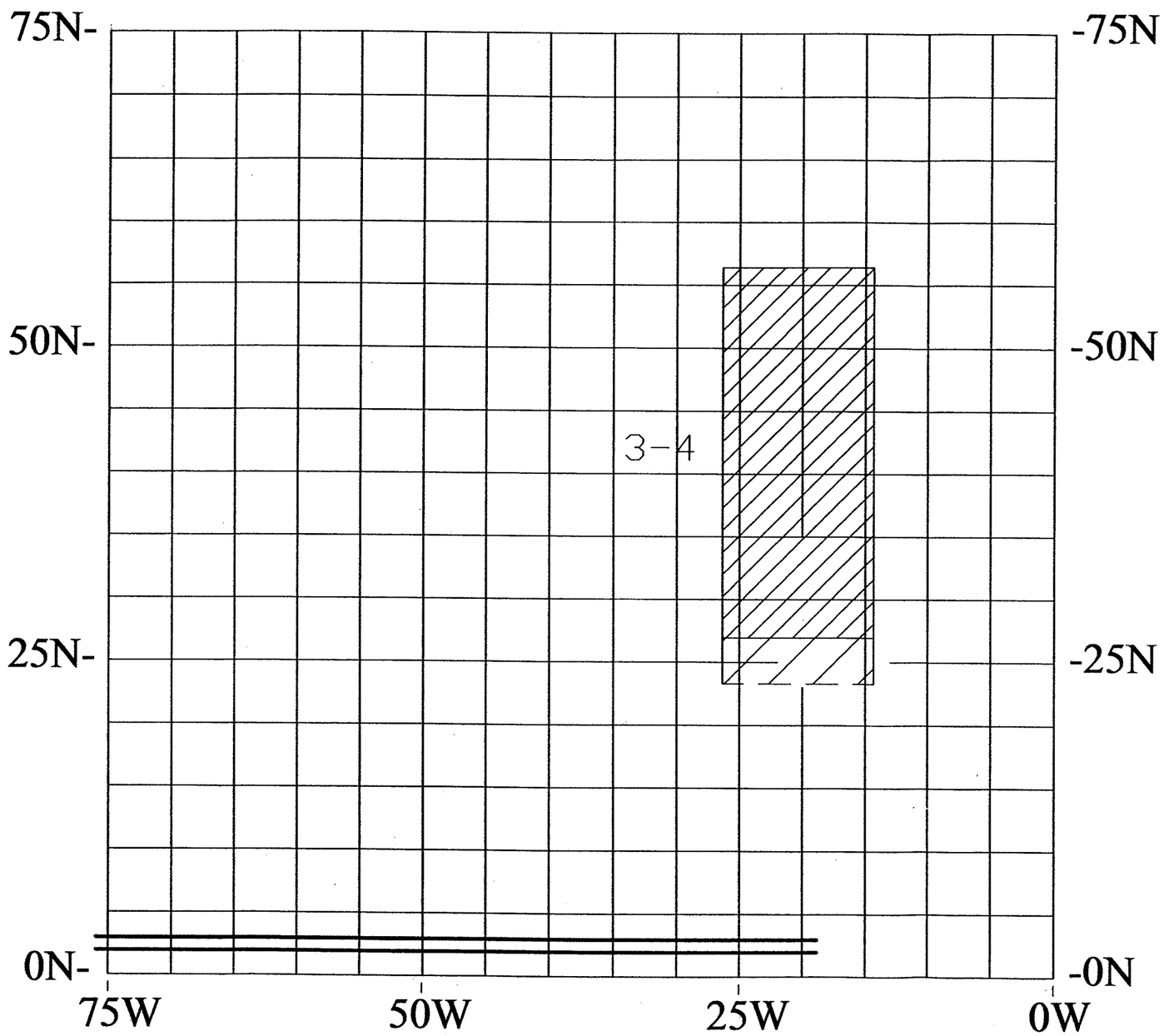

Site sketch from HGI field notes.

LEGEND

GPR Traverse

UST & Approx. Depth (ft)

Interp. Utility

0 10 20 40

SCALE in FEET

Note:
1. UST becomes deeper to north.
2. UST appears to extend beneath pit with piping.

FIGURE 1

MAY 2002	FILE NO. 200216

GPR INTERPRETATION PLOT
64 MILL STREET
BROOKFIELD, MASSACHUSETTS

HAGER GEOSCIENCE, INC.

HAGER GEOSCIENCE, INC.
596 MAIN STREET, WOBURN, MASSACHUSETTS 01801-2924
TELEPHONE: (781) 935-8111 FAX: (781) 935-2717

To: Philippa Odgers, Metcalf & Eddy, Inc.

From: Jutta Hager

Date: May 31, 2002

Re: Addendum: Geophysical Survey, 64 Mill Street, Brookfield, Massachusetts

---

The accompanying Figure 1 serves as an additional submittal to be appended to our letter report of May 22, 2002. On it I have plotted the location of the UST that our field crew located and marked in the field during their survey on May 21.

This is a slight modification of the figure that I e-mailed you on May 30. The east-west utility in the south may be a shallow water line, and the north-south utility indicated is probably the line that our field crew mapped south of the grid.

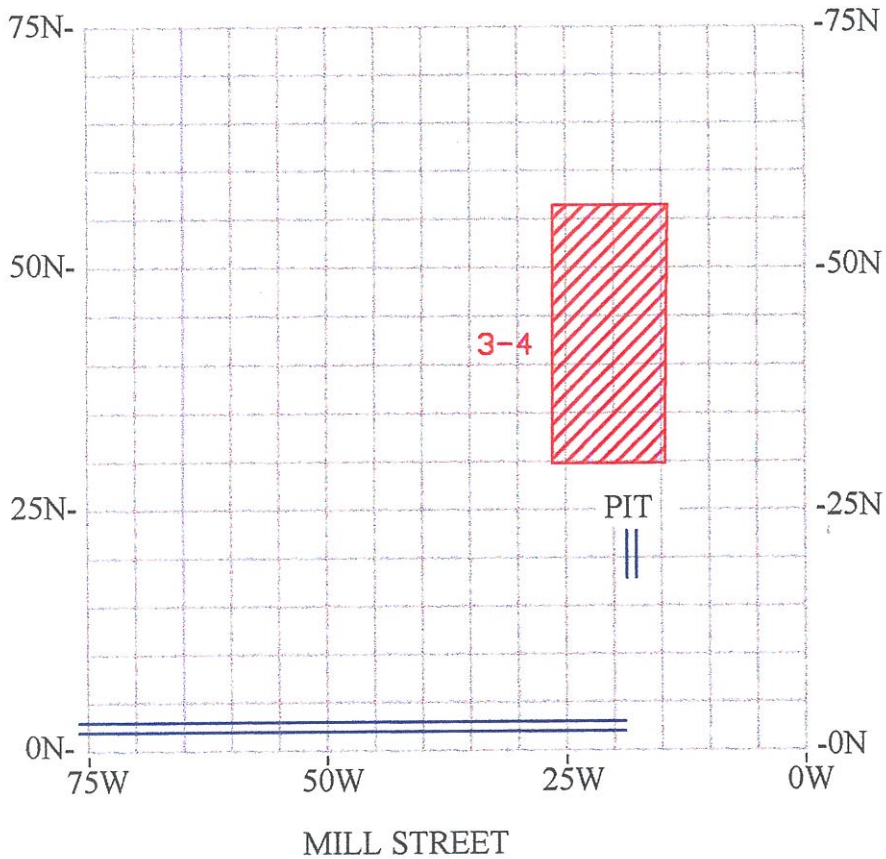

Site sketch from HGI field notes.

LEGEND

GPR Traverse

UST & Approx. Depth (ft)

Interp. Utility

0 10 20 40

SCALE in FEET

Note:
1. UST becomes deeper to north.
2. Piping from pit mapped to the south.

FIGURE 1

MAY 2002	FILE NO. 200216

GPR INTERPRETATION PLOT
64 MILL STREET
BROOKFIELD, MASSACHUSETTS

HAGER GEOSCIENCE, INC.
781.935.8111

APPENDIX D

TEST PIT, GEOLOGIC, AND WELL INSTALLATION LOGS

TEST PIT LOG

Former Mill Street Prop.
54-67 Mill Street
Brookfield, Massachusetts

Location/ID:	Test Pit 2	Excavator:	Geologic Services
Date:	June 10, 2002	M&E Geologist:	W. Abrahams-Dematte
Coordinates:	See separate figure	Total Depth:	7 feet bgs

0-1.5 ft	Tan and brown Fine SANDY LOAM, little brick, gravel, and wood with trace coal slag.
1.5-2.5 ft	Medium brown, Fine SANDY LOAM and Gravel, little-trace brick and wire, trace coal.
2.5-3.0 ft	Dark brown, Fine SANDY LOAM, little brick, large boulder.
3.0-4.0 ft	Red-brown Fine SANDY LOAM, brick, charred wood, trace fabric and fibrous material, Steel ring with graphite like material in it. At around 3.5 ft, sparkly black material with nail through it. Streaks like graphite.
4.0-6.5 ft	Brown-grey, Fine SANDY LOAM, and debris; mostly wood but many pipes and wires. Large piece steel, large beam across pit, graphite like material in wall of test pit. Pocket of orange fine sand.
6.5-7.0 ft	Boulder and burned material mixed with sandy textured material. Could not advance pit deeper due to footing or debris. Used hand auger to collect VPH. Bottom of pit was moist, wood was composting at depth as evidenced from steam and warm black wood material.

Asphalt like material.

Metal rings with sparkly black material.

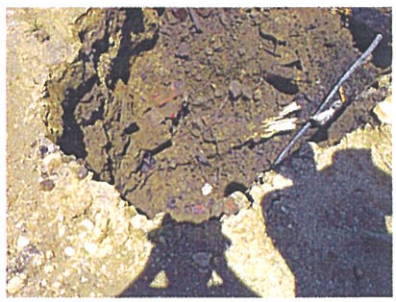

View of pit at approximately 4-5 feet.

PID = Photo Ionization Detector (readings in parts per million-ppm) – Readings taken every two feet, all 0 ppm.

Metcalf & Eddy

TEST PIT LOG

Former Mill Street Prop.
54-67 Mill Street
Brookfield, Massachusetts

Location/ID:	Test Pit 3	Excavator:	Geologic Services
Date:	June 10, 2002	M&E Geologist:	W. Abrahams-Dematte
Coordinates:	See separate figure	Total Depth:	9 feet bgs

0-2.5 ft	Dark brown and yellow-brown, Fine SANDY LOAM, loose, gravelly, little bricks, trace roots, wires, burnt paper and aluminum in pit.
2.5-4.0 ft	Light brown, Fine SAND, some to little medium sand, little silt and gravel. Little brick and wood, trace coal slag and white decomposed concrete like material.
4.0-6.0 ft	Brown, Fine SANDY LOAM, peppery look, metal, shiny black graphite like material (trace), wood beams, clay pipe, machinery part.
6.0-7.5 ft	Pipes at 6 feet, Orange-brown Fine SAND, some-little silt, little gravel, and couple boulders. Becomes more brown to yellowish brown and woodier below 7 ft.
7.5-8.5 ft	Yellow-brown Fine SANDY LOAM. Becomes moist at 8 ft.
8.5-9.0 ft.	Olive Fine SANDY LOAM, mottled, wet. No floor encountered, though from observations of floor to south, one should have been encountered. Slab/large boulders on south side of pit.

View of test pit.

View of waste pile (facing north)

PID = Photo Ionization Detector (readings in parts per million-ppm) – Readings taken every two feet, all 0 ppm.

TEST PIT LOG

Former Mill Street Prop.
54-67 Mill Street
Brookfield, Massachusetts

Location/ID:	Test Pit 4	Excavator:	Geologic Services
Date:	June 10, 2002	M&E Geologist:	W. Abrahams-Dematte
Coordinates:	See separate figure	Total Depth:	7.5 feet bgs

0-3 ft	Brown, Fine SANDY LOAM, gravelly, little-trace brick, trace wires, nails, various metal objects including 2" steel pipe (fuel line?), some charred wood.
3-4 ft	Mostly black, charred material, possibly creosote odor or petroleum odor.
4-6 ft	Black, Fine to Coarse SANDY LOAM, wood, brick, several boulders, became moist around 5 ft.
6-7.5 ft	Black, mostly charred wood, wires, moist-slightly wet. Floor reached at 7.5 feet.

View of waste pile, top 3 feet. Below similar.

West facing view of pit.

PID = Photo Ionization Detector (readings in parts per million-ppm) – Readings taken every two feet, all 0 ppm.

TEST PIT LOG

Former Mill Street Prop.
54-67 Mill Street
Brookfield, Massachusetts

Location/ID:	Test Pit 1	Excavator:	Geologic Services
Date:	June 10, 2002	M&E Geologist:	W. Abrahams-Dematte
Coordinates:	See separate figure	Total Depth:	7 feet bgs

0-2.0 ft	Red-light brown, Medium SAND, little bricks, trace glass and coal slag, dry.
2.0-4.0 ft	Red-brown, Fine and Medium SAND, little brick, several cobbles, trace wood and coal slag.
4.0-6.0 ft	Dug out crushed tin canister and ran into foundation wall. Moved 5 ft. south. Red-brown, Fine and Medium SAND, little cobble and brick, little-trace burnt wood and sheet metal. Loose, dry.
6.0-7.0 ft	A small transformer, a large roll of half burnt vinyl flooring, and many burnt beams. A 4" cast iron pipe, trending east-west, prevented further digging. Dry.

Small transformer.

Debris in pit. Vinyl flooring bottom right.

View of Test Pit 1 at 4-5 foot depth.

PID = Photo Ionization Detector (readings in parts per million-ppm) – Readings taken every two feet, all 0 ppm.

GEOLOGIC LOG

METCALF & EDDY, INC.	SITE LOCATION	BORING/WELL ID
30 Harvard Mill Square Wakefield, MA 01880 (617) 246-5200	Mill Street Property Brookfield, Massachusetts	ME-1

DRILL CONTRACTOR: Geologic, Inc.
DRILLER: Tom Calvin
ENG/GEO: William Abrahams-Dematte
START DATE: June 11, 2002
FINISH DATE: June 11, 2002

DRILLING METHOD: Hollow Stem Auger
DRILLING FLUID: None
WELL INSTALLED: 12 Foot Well (see attached well construction log)

SAMPLING METHOD: 2" Split Spoon
DRILL RIG: B-57 Mobil Truck Mount Rig

Sample Types	Descriptors		
S3 = 3" Split Spoon	trace	0 to 10%	little 10 to 30%
SS = 2" Split Spoon	some	30 to 45%	

Depth Below Grade	Sample Type-No.	Blow Counts (per 6")	N - Value	Recorded Length (feet)	*PID (ppm)	Water Table	Field Classification (depths in feet)	Stratigraphic Description
0 ft	SS-1	- / 3 / 4 / 5	7	0.2	NA [NA]		0-0.5 Concrete 0.5-0.7 FILL, grey/orange/black, medium sand, trace gravel, dry. 0.7-2.0 Void (sample taken in acetate liner that was left in spoon)	Gravel Pack --------0.6'--------
2 ft								
4 ft	SS-2	12 / 12 / 17 / 14	29	0.9	NA [NA]	WT~3.8	2.0-3.1 Void 3.1-3.5 Grey, Fine SAND, some medium-coarse sand, dry. 3.5-3.9 Orange, Fine SANDY LOAM, moist at 3.9. 3.9-4.0 Tan, Fine SANDY LOAM, mottled, wet.	Fill/ Disturbed
6 ft	SS-3	5 / 12 / 15 / 17	27	0.05	NA [NA]		4.0-5.95 Void 5.95-6.0 Grey, Fine SANDY LOAM with high clay content.	
8 ft	SS-4	14 / 14 / 12 / 17	26	2.0	0.0 [0.0]		6.0-7.7 Light brown, Fine SAND, zones of some silt (stratified) trace gravel, saturated (soupy). 6.7-7.2 highest zone of silt with trace clay. 7.7-8.0 Grey-blue, Fine SAND and SILT, trace gravel, wet.	-------- ~6.0'--------
10 ft	SS-5	12 / 17 / 29 / 31	46	1.5	0.0 [0.0]		8.0-8.5 Void 8.5-8.9 Natural, Coarse-Very Coarse SAND, trace fine sand and silt, wet. 8.9-10.0 Grey, Fine SAND and SILT, wet, 9.6-10 little-trace gravel	SAND & SILT
12 ft	SS-6	8 / 28 / 39 / 54	67	1.8	0.0 [0.0]		10.0-10.2 Void 10.2-10.5 Grey-brown, Coarse-Very Coarse SAND and Fine SAND (slump, trouble removing stem before sample taken) 10.5-12.0 Grey-black, GRAVEL and Fine SAND, little-trace silt, dense, slightly moist.	EOB 12.0'
							End of Boring at 12 Feet.	

* PID reading taken from Split Spoon/ [PID readings as headspace samples] NA = Not Analyzed

GEOLOGIC LOG

METCALF & EDDY, INC.	SITE LOCATION	BORING/WELL ID
30 Harvard Mill Square Wakefield, MA 01880 (617) 246-5200	Mill Street Property Brookfield, Massachusetts	ME-2

DRILL CONTRACTOR: Geologic, Inc.
DRILLER: Tom Calvin
ENG/GEO: William Abrahams-Dematte
START DATE: June 11, 2002
FINISH DATE: June 11, 2002

DRILLING METHOD: Hollow Stem Auger
DRILLING FLUID: None
WELL INSTALLED: 12 Foot Well (see attached well construction log)

SAMPLING METHOD: 2" Split Spoon
DRILL RIG: B-57 Mobil Truck Mount Rig

Sample Types	Descriptors		
S3 = 3" Split Spoon	trace	0 to 10%	little 10 to 30%
SS = 2" Split Spoon	some	30 to 45%	

Depth Below Grade	Sample Type-No.	Blow Counts (per 6")	N - Value	Recorded Length (feet)	*PID (ppm)	Water Table	Field Classification (depths in feet)	Stratigraphic Description
0 ft 2 ft	SS-1	43 3 5 8	8	0.1	NA [NA}	WT~1.0	0-1.9 Void 1.9-2.0 Tan, Fine-Medium SAND, dry. (basket destroyed in spoon)	
4 ft	SS-2	27 28 24 25	52	1.3	0.0 [0.0]		2.0-2.7 Void 2.7-2.9 Black-grey, Medium to Very Coarse SAND, saturated. 2.9-4.0 Orange-brown, Fine SAND, little coarse to very coarse sand, saturated, dense. Piece coarse gravel at 2.9'.	Fill/ Disturbed ------- ~3.5'?-------
6 ft	SS-3	11 11 15 10	26	0.4	0.0 [0.0]		4.0-5.6 Void 5.6-6.0 Same As 2.9-4.0	
8 ft	SS-4	7 12 27 42	39	2.0	0.0 [0.0]		6.0-7.1 Red-brown, Medium to Very Coarse SAND and GRAVEL, some fine sand, little silt, saturated, loose. 7.1-8.0 Blue-grey Fine SAND and SILT, wet, firm.	
10 ft	SS-5	40 62 48 54	110	1.3	0.0 [17.6]		8.0-8.7 Void 8.7-8.9 Grey/Natural, Very Coarse SAND. 8.9-9.2 Grey, Fine SAND, trace medium sand, firm. 9.2-10.0 Grey, SILT and Fine SAND, trace coarse sand and fine gravel, dense, dry.	SAND & SILT
12 ft	SS-6	23 29 36 33	65	1.4	0.0 [16.4]		10.0-10.6 Void 10.6-11.1 Grey, SILT and Fine SAND, little-trace clay, loose, trace pebble and fine gravel, saturated. 11.1-12.0 Same as 9.2-10.0	EOB 12.0'
							End of Boring at 12 Feet.	

* PID reading taken from Split Spoon/ [PID readings as headspace samples] NA = Not Analyzed

GEOLOGIC LOG

METCALF & EDDY, INC.	SITE LOCATION	BORING/WELL ID
30 Harvard Mill Square Wakefield, MA 01880 (617) 246-5200	Mill Street Property Brookfield, Massachusetts	ME-3

DRILL CONTRACTOR: Geologic, Inc.
DRILLER: Tom Calvin
ENG/GEO: William Abrahams-Dematte
START DATE: June 12, 2002
FINISH DATE: June 12, 2002

DRILLING METHOD: Hollow Stem Auger
DRILLING FLUID: None
WELL INSTALLED: 14 Foot Well (see attached well construction log)

SAMPLING METHOD: 2" Split Spoon
DRILL RIG: B-57 Mobil Truck Mount Rig

Sample Types	Descriptors		
S3 = 3" Split Spoon	trace	0 to 10%	little 10 to 30%
SS = 2" Split Spoon	some	30 to 45%	

Depth Below Grade	Sample Type-No.	Blow Counts (per 6")	N - Value	Recorded Length (feet)	*PID (ppm)	Water Table	Field Classification (depths in feet)	Stratigraphic Description
0 ft 2 ft	SS-1	8 25 21 14	46	0.5	0.0 [12]	WT~6.0	0.0-1.5 Void 1.5-2.0 Yellow-brown, Fine SAND, trace medium sand and gravel, loose, dry.	Fill/ Disturbed
4 ft	SS-2	16 10 9 23	19	0.0	NA [NA]		2.0-4.0 Void No Recovery	------ ~4.0'------
6 ft	SS-3	6 10 8 6	18	0.9	0 [0.0]		4.0-5.1 Void 5.1-6.0 Blue-grey, CLAY, some silt, little-trace fine sand, mottled, dense, 1 piece gravel at ~5.5', 5.7-6.0' ribbon like.	CLAY
8 ft	SS-4	8 14 12 22	26	2.0	0.0 [0.0]		6.0-6.3 Grey-brown, Clay, little silt, trace very coarse sand, mottled, wet. 6.3-6.6 Yellow-brown, Fine to Medium SAND, trace coarse sand moist.	
10 ft	SS-5	17 38 29 35	67	1.3	0.0, [0.0]		6.6-7.0 Same As 6.0-6.3 7.0-8.0 Blue-grey, SILT and CLAY, little fine sand, trace gravel, wet. (tillish like material in head of spoon) 8.0-8.7 Void	------ ~8.0'------
12 ft	SS-6	75 58 120 for 4" -	-	2.0	0.0, [0.0]		8.7-10.0 Blue-grey, (very) Fine SAND, little silt, little-trace fine gravel, trace clay, saturated. 10.0-10.9 Grey, Coarse SAND and Fine GRAVEL, saturated (possibly fall in, spoon only went 1.4 ft. before refusal)	SAND Little-Trace Gravel Trace Silt
14 ft	SS-7	- - 56 78	-	1.6 (spoon: 13-15')			10.9-11.2 Grey/Natural, Medium SAND, some-little fine sand, little-trace gravel, firm, wet. 11.2-11.6 Grey, Fine SAND, trace silt and gravel, dnese. 11.6-12.0 Red-brown, Fine SAND, firm.	
16 ft	SS-8	120 for 5" - EOB 15 ft.	-	^	NA [NA]		12.0-13.0 Boulder, augered through. 13.0-13.4 Void 13.4-14.0 Grey-brown, with strong orange (oxidized) zones, Fine SAND, trace medium sand and silt. 14.0-14.6 Natural, Medium SAND. 14.6-15.0 Same As 13.4-14.0	EOB 15.0'
							End of Boring at 15 Feet.	

* PID reading taken from Split Spoon/ [PID readings as headspace samples] NA = Not Analyzed

GEOLOGIC LOG

METCALF & EDDY, INC.	SITE LOCATION	BORING/WELL ID
30 Harvard Mill Square Wakefield, MA 01880 (617) 246-5200	Mill Street Property Brookfield, Massachusetts	ME-4

DRILL CONTRACTOR: Geologic, Inc.
DRILLER: Tom Calvin
ENG/GEO: William Abrahams-Dematte
START DATE: June 12, 2002
FINISH DATE: June 12, 2002

DRILLING METHOD: Hollow Stem Auger
DRILLING FLUID: None
WELL INSTALLED: 15 Foot Well (see attached well construction log)

SAMPLING METHOD: 2" Split Spoon
DRILL RIG: B-57 Mobil Truck Mount Rig

Sample Types	Descriptors		
S3 = 3" Split Spoon	trace	0 to 10%	little 10 to 30%
SS = 2" Split Spoon	some	30 to 45%	

Depth Below Grade	Sample Type-No.	Blow Counts (per 6")	N - Value	Recorded Length (feet)	*PID (ppm)	Water Table
0 ft	SS-1	- / 22 / 9 / 6	31	1.3	0.0 [0.0]	
2 ft						
	SS-2	36 / 120 / 250 for 0" / -	370 for 6"	0.4	0.0 [0.0]	
4 ft						
	SS-3	27 / 31 / 19 / 22	50	1.5	0.0 [0.0]	
6 ft						
	SS-4	41 / 54 / 60 / 56	114	1.4	0.0 [0.0]	WT~7.0
8 ft						
	SS-5	31 / 54 / 80 / 36	134	1.7	0.0 [7.6]	
10 ft						
	SS-6	18 / 21 / 23 / 25	44	1.4	0.0, [0.0]	
12 ft						
	SS-7	33 / 45 / 49 / 52	94	2.0		
14 ft						
	SS-8	11 / 12 / 33 / 46	45	2.0	0.0, [0.0]	
16 ft						
					NA, [NA]	

Field Classification (depths in feet)		Stratigraphic Description
0.0-0.5	Asphalt	Asphalt
0.5-0.7	Void	-------0.6'-------
0.7-1.3	Brown, Fine SAND, little-trace silt, trace gravel, asphalt chips, dry, dense.	
1.3-1.6	Red-brown, Fine SAND, little gravel, loose, dry.	
1.6-2.0	Dark brown, Fine SAND, trace silt and gravel, firm, dry.	
2.0-3.6	Void	
3.6-4.0	Orange-red, Fine SAND, trace asphalt chips, loose, dry.	Fill/ Disturbed
4.0-4.5	Void	
4.5-4.7	Red-brown, Fine SAND, trace medium sand and gravel.	
4.7-5.5	Olive-brown, CLAY, little-trace silt and gravel.	
5.5-6.0	Red-brown, Fine SAND, little-trace silt, redder at 5.5'	
6.0-6.6	Void	
6.6-7.6	Red-brown, Fine SAND, little silt, trace coarse sand, moist	
	7.0-7.2 Grey, Coarse piece GRAVEL and Coarse SAND	
7.6-7.7	Brown, Coarse SAND	------- ~7.5'-------
7.7-7.8	Black, Fine SAND	
7.8-8.0	Brown-red, Fine and Medium SAND	
8.0-8.3	Void	
8.3-9.0	Mix brown/black/red, Fine and Medium SAND, little-trace silt.	
9.0-9.2	Tan, Fine SAND	
9.2-10.0	Mix yellow/orange/red, Fine and Medium SAND, trace gravel	
10.0-10.6	Void	
10.6-10.8	Brown, Fine SAND, wet, loose.	
10.8-11.3	Brown, Medium to Very Coarse SAND, some fine sand, (variable compostion - stratified), wet.	SAND & GRAVEL trace silt & clay
11.3-11.8	Grey, SILT and CLAY, slightly moist, dense.	
11.8-12.0	Red-tan, Fine SAND, moist-wet.	
12.0-13.2	Red, Fine SAND, trace gravel at 12.0, moist-wet.	
13.2-14.0	Yellow-brown, Fine SAND, moist-wet. At 13.6 & 13.8 lens of Coarse Sand.	
14.0-14.2	Red-brown, Fine SAND, saturated.	
14.2-14.4	Olive-grey, Fine SAND, saturated.	
14.4-15.2	Grey, Fine SAND, some-little silt, trace gravel, wet.	EOB 16.0'
15.2-15.5	Grey, CLAY, some silt, little-trace fine sand.	
15.5-16.0	Grey, Fine SAND, little fine gravel, one pce. coarse gravel At 15.8' pocket of white very coarse sand size chips with a piece of gravel.	
	End of Boring at 16 Feet.	

* PID reading taken from Split Spoon/ [PID readings as headspace samples] NA = Not Analyzed

MONITORING WELL INSTALLATION LOG

PROJECT: **Mill St. Prop., Brookfield, MA - TBA**	JOB NO. **200100-6-114**	WELL NO. **ME-1**
DRILLING CONTRACTOR: Geologic	COORDINATES:	
BEGUN: 06/11/2002	GEOLOGIST William Abrahams-Dematte	WATER LEVEL (Depth/Elev.) ~3.8 ft below grade surface on 6/12/02
FINISHED: 06/11/2002	DRILLER: Tom Calvin	

DEPTH BGS HEIGHT AGS (FT)	ELEV. (FT) NGVD DATUM
0.0'	
0.7'	
0.5'	
1'	
2'	
12'	
12'	

FLUSHMOUNT SURFACE CASING:
DIA.: 4"
TYPE: Alum. - Pentagonal nut

CONCRETE

GENERALIZED GEOLOGIC LOG

Refer to Boring Log

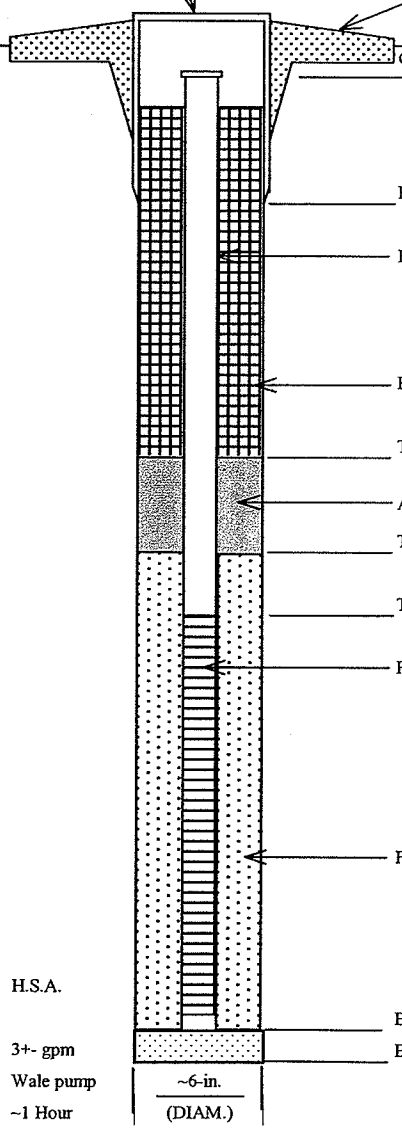

GROUND SURFACE

TOP OF PVC RISER

BOTTOM OF PROTECTIVE PIPE

PVC RISER CASING:
SCH.: 40
DIAM.: 2-in.

BACKFILL TYPE: Morie Sand #1

TOP OF ANNULAR SEAL

ANNULAR SEAL: TYPE: Bentonite Chips

TOP OF FILTER PACK

TOP OF WELL SCREEN

PVC SCREEN:
SCH.: 40
DIAM.: 2-in.
SLOT SIZE: 0.010-in.

FILTER PACK
TYPE: #1 Morie sand/equiv.
SIZE: medium sand

BOTTOM OF SCREEN

BOTTOM OF HOLE*

~6-in. (DIAM.)

METHOD DRILLED: H.S.A.

METHOD DEVELOPED: 3+- gpm Wale pump

TIME DEVELOPED: ~1 Hour

M&E

MONITORING WELL INSTALLATION LOG

PROJECT: **Mill St. Prop., Brookfield, MA - TBA**	JOB NO. **200100-6-114**	WELL NO. **ME-2**
DRILLING CONTRACTOR: Geologic	COORDINATES:	
BEGUN: 06/11/2002	GEOLOGIST William Abrahams-Dematte	WATER LEVEL (Depth/Elev.) ~0.5' ft below grade surface on 6/12/02
FINISHED: 06/11/2002	DRILLER: Tom Calvin	

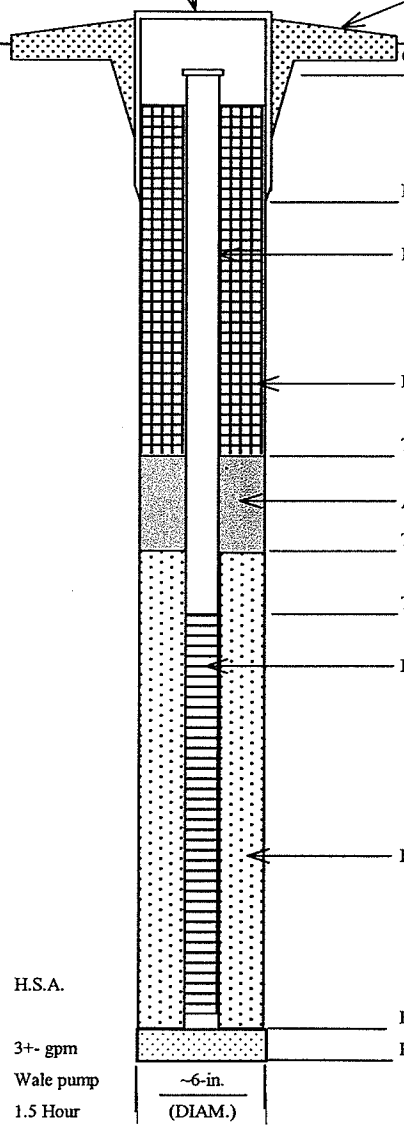

	DEPTH BGS HEIGHT AGS (FT)	ELEV. (FT) NGVD DATUM
FLUSHMOUNT SURFACE CASING: DIA.: 4" TYPE: Alum. - Pentagonal nut		
CONCRETE		
GENERALIZED GEOLOGIC LOG		
GROUND SURFACE	0.0'	
TOP OF PVC RISER		
Refer to Boring Log		
BOTTOM OF PROTECTIVE PIPE	0.7'	
PVC RISER CASING: SCH.: 40 DIAM.: 2-in.		
BACKFILL TYPE: Morie Sand #1		
TOP OF ANNULAR SEAL	0.5'	
ANNULAR SEAL: TYPE: Bentonite Chips		
TOP OF FILTER PACK	1'	
TOP OF WELL SCREEN	2'	
PVC SCREEN: SCH.: 40 DIAM.: 2-in. SLOT SIZE: 0.010-in.		
FILTER PACK TYPE: #1 Morie sand/equiv. SIZE: medium sand		
BOTTOM OF SCREEN	12'	
BOTTOM OF HOLE*	12'	

METHOD DRILLED: H.S.A.

METHOD DEVELOPED: 3+- gpm Wale pump

TIME DEVELOPED: 1.5 Hour

~6-in. (DIAM.)

M&E